The City of El Paso Streetcar
Storm Water Pollution Prevention Plan Report (SWPPP)

Prepared for:

The City of El Paso, Texas

Prepared by:

URS Corporation
TX Firm 3162
9400 Amberglen Boulevard
Austin, Texas 78729
TBPE Registration No. F-3162
Contact Chris Wright
Email: chris.wright@urs.com
Phone: (512) 419-6419

June 7, 2013

CERTIFICATION

The Primary Operator (the Contractor) shall read and sign the following Contractor's Certification Statement and submit the original signature page to The City of El Paso (COEP) prior to construction.

CONTRACTOR'S CERTIFICATION STATEMENT

I certify that the COEP Streetcar Construction Sites are in compliance with the base Storm Water Pollution Prevention Plan (SWPPP) Report, Amendments, and the Texas Pollution Discharge Elimination System (TPDES) General Permit No. TXR150000.

I further certify that I am authorized to sign this report under Title 30 Texas Administrative Code (TAC) 305.128 (relating to Signatories to Reports). I certify under penalty of law that I have read, fully understand, and shall comply with all requirements and standards set by this document, the COEP Streetcar SWPPP, all attachments, and all additional information submitted by me. I am aware that failure to comply with these requirements and standards may result in a violation of the State and Federal Clean Water Acts, including the possibility of fine and imprisonment.

I also certify under penalty of law that the information submitted for this document, the COEP Streetcar SWPPP, and all attachments was prepared under my direction or supervision in accordance with a system designed to assure that qualified personnel properly gather and evaluate the information submitted. Based on my inquiry of the person or persons who manage the system or those persons directly responsible for gathering the information, the information is, to the best of my knowledge and belief, true, accurate, and complete. I am aware that there are significant penalties for submitting false information including the possibility of fine and imprisonment for knowing violations.

Signature	Date
Print Name	Title and Company

OWNER'S CERTIFICATION

I certify under penalty of law that this document, the COEP Streetcar Storm Water Pollution Prevention Plan (SWPPP) Report, and all attachments were prepared under my direction or supervision in accordance with a system designed to assure that qualified personnel properly gather and evaluate the information submitted. Based on my inquiry of the person or persons who manage the system or those persons directly responsible for gathering the information, the information submitted, is, to the best of my knowledge and belief, true, accurate, and complete. I am aware that there are significant penalties for submitting false information including the possibility of fine and imprisonment for knowing violations.

Signature	Date
Print Name	Title and Company

Amendments

The Contractor must provide a record of construction activities, maintenance records, and notification of any changes in the construction schedule to the City of El Paso (COEP). The Contractor will amend the base Storm Water Pollution Prevention Plan (SWPPP) Report as changes in construction activities or operations affect the discharge of significant quantities of sediment or other pollutants to surface waters, groundwater, or the COEP's municipal storm water sewer system. The Contractor will develop and attach inspection/maintenance forms and proposed corrective measures protocols in the appendices of the SWPPP. If the COEP's inspectors or the construction management determine that construction activities are not in compliance with this SWPPP or any other condition of the Texas Pollutant Discharge Elimination System (TPDES) General Permit No. TXR150000 (issued February 19, 2013), the Contractor will indicate such violations in the inspection forms. It will be the Prime Contractor's responsibility to correct such deficiencies and document the actions taken to correct them. The original version of this SWPPP was prepared on June 7, 2013. All subsequent amendments are documented below.

Amendment Log

Amendment Number	Date	Nature of Amendment

Insert amendments to the SWPPP here.

Table of Contents

Section **Page**

Primary and/or Secondary Operator Certification ii
Amendments iii
List of Acronyms ix

1.0 Introduction 1
1.1 Limitations on CGP Coverage 1
1.2 Endangered Species Act, Migratory Birds, and Archaeological Deposits 1
1.3 Primary, Secondary, and MS4 Operators 2
1.4 Timeline for SWPPP 2
1.5 SWPPP Plan Review, Availability and On-Site Location 2
1.6 Baseline SWPPP 3

2.0 Site Description 4
2.1 Nature of Construction Activity 4
2.1.1 Conflicting Utility Relocation and Early Work Activities 4
2.1.2 Primary Guideway Work Activities 5
2.1.3 Maintenance Storage Facility (MSF) Work Activities 5
2.2 Potential Pollutant Sources 5
2.3 Construction Schedule 6
2.4 Acreage and Lengths 6
2.5 Material Storage 7
2.6 Description of the Soil Type 7
2.7 Location Map 7
2.8 Detailed Site Maps 7
2.9 Support Activities 8
2.10 Name of Receiving Waters 8
2.11 Conditions for Authorization of CGP 8

3.0 Description of BMPs 9
3.1 Erosion BMP Controls 9
3.2 Sediment BMP Controls 9
3.3 BMP Controls 10
3.3.1 Tree Protection 10
3.3.2 Geotextile Fabric and Plastic Covers 10
3.3.3 Silt Fence, Triangular Filter Dike, Erosion Control Log 11
3.3.4 Inlet Protection 11
3.3.5 Earthen Dikes 11
3.3.6 Sediment Traps 11
3.3.7 Stabilized Construction Exit 12
3.3.8 Street Sweeping and Vacuuming 12
3.3.9 Tracking Controls 12
3.3.10 Watering Soil Surfaces 12
3.3.11 Vegetation 12
3.4 Site Housekeeping 12
3.4.1 Concrete Truck Wash Out Requirements 13
3.4.2 Solid Waste Management 14

3.4.3 Hazardous Waste Management 14
3.4.4 Impacted Soil Management 15
3.4.5 Wind Erosion Control 15
3.4.6 Sanitary/Septic Waste Management 16
3.4.7 Liquid Waste Management 16
3.4.8 Material Delivery and Storage 16
3.4.9 Material Use 17
3.4.10 Stockpile Management 17
3.4.11 Spill Prevention and Control 18
3.5 Non-Storm Water Controls 18
3.5.1 Water Control and Conservation 19
3.5.2 Vehicle and Equipment Cleaning 19
3.5.3 Vehicle and Equipment Fueling 20
3.5.4 Vehicle and Equipment Maintenance 20
3.6 Permanent Storm Water Controls 21
3.7 BMP Management 21
3.7.1 Scheduling 21
3.7.2 Visual Monitoring 22
3.7.3 Maintenance Procedures 22
3.7.4 Inspections 22
3.8 Amendments to the SWPPP 24
3.9 BMP Documentation 24
3.10 Retention of Records 24
3.11 Limitations 24

4.0 References 25

List of Appendices

Appendix A Location Map
Appendix B Notice of Intent (NOI)
Appendix C Large Construction Site Notice
Appendix D Subcontractor Certifications/Agreements
Appendix E BMP Factsheets
Appendix F SWPPP Management Logs
Appendix G Delegation of Authority

List of Acronyms

BMP	Best Management Practice
CGP	Construction General Permit
COEP	The City of El Paso
CWA	Clean Water Act
EPA	Environmental Protection Agency
FWPCA	Federal Water Pollution Prevention Control Act
iSWM	Integrated Storm Water Management
MS4	Municipal Separate Storm Sewer System
MSDS	Materials Safety Data Sheets
MSF	Maintenance Storage Facility
NCTCOG	North Central Texas Council of Governments
NOAA	National Oceanic and Atmospheric Administration
NOI	Notice of Intent
NOT	Notice of Termination
OCS	Overhead Contact System
SWPPP	Storm Water Pollution Prevention Plan
TAC	Texas Administrative Code
TCEQ	Texas Commission on Environmental Quality
TPDES	Texas Pollutant Discharge Elimination System
TxDOT	Texas Department of Transportation
UTEP	University of Texas at El Paso
URS	URS Corporation
WQA	Water Quality Act

1.0 Introduction

In 1972, Congress passed the Federal Water Pollution Prevention Control Act (FWPCA), also known as the Clean Water Act (CWA), to restore and maintain the quality of the nation's waterways. The ultimate goal of this legislation is to make the nation's waterways fishable, swimmable, and drinkable. In 1987, the Water Quality Act (WQA) added provisions that allowed the Environmental Protection Agency (EPA) to govern storm water discharges from construction activities.

The purpose of this Storm Water Pollution Prevention Plan (SWPPP) is to provide guidelines for preventing or minimizing sediment and pollutants that originate from construction activities from flowing into the Municipal Separate Storm Sewer System (MS4), surface water bodies, or subsurface water bodies.

The SWPPP will require implementation of sediment and erosion controls prior to commencing construction activities, and a hard copy will be readily available on site for the duration of the construction activities. This SWPPP will be amended to reflect changes to the Construction General Permit (CGP) or changes in construction or operations that may affect the discharge of pollutants from the construction site to surface waters or storm drain systems. The SWPPP will also be amended if it is in violation of any condition of the CGP or has not achieved the general objective of reducing pollutants in storm water discharge.

The Report (SWPPP) has been prepared and will be implemented to meet the requirements set forth by the Texas Commission on Environmental Quality (TCEQ) under the Texas Pollutant Discharge Elimination System (TPDES) General Permit TXR150000 (CGP issued February 19, 2013). This construction project is classified as a Large Construction Activity. The project will disturb more than 5 acres of land. A Notice of Intent (NOI) will be submitted to TCEQ to comply with the CGP.

1.1 Limitations on CGP Coverage

The following discharges are not eligible for coverage under the CGP: discharges that occur after construction activities have undergone final stabilization and discharges that have the reasonable potential to cause a violation of water quality standards or that would fail to protect and maintain existing designated uses. Only discharges composed entirely of storm water associated with construction activity may be authorized under the CGP.

The CGP does not limit the authority of federal, other state, or local government's entities from placing additional or more stringent requirements on construction activities or discharges from construction activities.

1.2 Endangered Species Act, Migratory Birds, and Archaeological Deposits

Discharges that would adversely affect a listed endangered or threatened aquatic species or its critical habitat are not authorized under the CGP unless the requirements of the Endangered Species Act are satisfied.

Potential habitats exist in the project area for several species of concern. These species include: cave myotis, Yuma mytosis, pale Townsend's big-eared bat, big free-tailed bat, long-legged bat and migratory peregrine falcons.

The streetcar construction project will not acquire additional Right-of-Way (ROW). Disturbance to any native habitat of concern will be unlikely along the streetcar construction corridor.

In the event that migratory birds are encountered on site during project construction, every effort will be made to avoid taking of protected birds, active nests, eggs and/or young. The contractor would remove all old migratory bird nests from September 1 through the end of February from any structure where work will be done. In addition, the contractor will be prepared to prevent migratory birds from building nests from March 1 to August 31.

In the event that unanticipated archaeological deposits are encountered during construction, work in the immediate area will cease, and TxDOT archaeological staff will be contacted to initiate post-review discovery procedures.

1.3 Primary, Secondary, and MS4 Operators

The Primary Operator, the Contractor, will be responsible for the day-to-day operational control of the construction site activities that ensure compliance with this SWPPP. The Primary Operator will employ any plan and specification changes.

The Secondary Operator will be the Design Engineer and/or Construction Manager. The Secondary Operators, along with the City of El Paso (COEP), will have control over the plans and specifications changes.

The MS4 Operator is the COEP, Public Works Department, 2 Civic Center Plaza, 6th Floor, El Paso, Texas 79901-1196, Phone: 915-541-4475.

1.4 Timeline for SWPPP

The SWPPP will be prepared prior to obtaining authorization under this general permit and implemented prior to commencing construction activities that result in soil disturbance.

1.5 SWPPP Plan Review, Availability and On-Site Location

The SWPPP will be retained on site in a location determined by the Primary Operator. At a minimum, a notice must be posted describing the location of the SWPPP. The SWPPP must be readily available at the time of an on-site inspection to: the executive director; federal, state, or local agency approving sediment and erosion control plans, grading plans, or storm water management plans; local government officials; and the operator of the MS4 receiving discharges from the site.

Additionally, "Primary Operator of a Large Construction Site" Notices must be placed in a publicly accessible location near where construction is actively underway. The notices must be relocated as necessary along the project phasing plans.

The notices must be readily available for viewing by the general public. This permit does not provide the general public with any right to trespass on a construction site for any reason. This permit does not require permittees to allow the general public to access the construction site.

1.6 Baseline SWPPP

This SWPPP, along with the technical specifications, construction drawings, and the documents listed below constitute the Baseline SWPPP for this project.

1. Technical Specification Section 1018, "Tree Protection";
2. Technical Specification Section 1122, "Temporary Erosion, Sedimentation, and Environmental Controls*";*
3. Civil/Track Vol. 1, SWPPP Notes, Drawings E100 and E101;
4. Civil/Track Vol. 1, Environmental Permits, Issues, and Commitments (EPIC), Drawing No. E102;
5. Civil/Track Vol. 1, SWPPP, Drawing No. E103 through E170;
6. Civil/Track Vol. 1, SWPPP Detail Drawings, Drawing No. E171 through E177;
7. Civil/Track Vol. 1, Drainage Area Maps, Drawing No. C600 through C616; and
8. MSF Vol. 4, SWPPP Details, Drawing No. UM105 through UM106.

This Baseline SWPPP must be revised and updated by the Contractor per regulatory requirements, as necessary, to reflect the progress and staging of construction on this project and stabilized construction entrances. The letter of delegation (notice of change) delegates authority and responsibility to the Contractor to make changes to the Baseline SWPPP.

The Contractor shall ensure that the SWPPP includes all items required by the TCEQ's TPDES General Permit TXR150000, Part III, Section F. This includes adding and updating the following items (if applicable) on the SWPPP:

1. Construction schedule;
2. Off-site borrow areas;
3. Location of construction entrances and exits;
4. Disturbed areas and non-disturbed areas;
5. Equipment storage and staging areas;
6. On-site waste and trash storages, including portable restrooms;
7. Fueling areas;
8. Concrete mix and concrete wash off areas;
9. Hazardous Waste Management;
10. Concrete Waste Management; and

11. Slurry Waste Management.

2.0 Site Description

The El Paso Streetcar Project will implement a modern streetcar route in the COEP, El Paso County, Texas. The proposed streetcar route consists of a 2-mile-long corridor with two loops making a total of 4.8 miles of single-track. The streetcar route will encircle commuters from the downtown International Bridges/Golden Horseshoe area along South Kansas Street, Father Rahm Ave, South Santa Fe Street, and Franklin Avenue. The second streetcar route runs north along Stanton Street through the Cincinnati Entertainment District and the Kern Place Neighborhood, then through the University of Texas at El Paso (UTEP)/Don Haskins Center along Glory Road and Oregon Street. The route continues through Providence/Las Palmas Medical Center and El Paso Community College Rio Grande Campus while heading south to connect with Franklin Avenue. The route will include streetcar stops every 2 to 3 blocks along a guideway integrated into the existing street pavement in mixed flow traffic. A maintenance and storage facility (MSF) is proposed along Santa Fe Street just north of the intersection with Father Rahm Avenue. See Location Map in Appendix A.

The topography is generally level in the downtown area to mildly sloping in the UTEP area. The project limits are typically confined to an urban commercial setting. The streetcar route is located within the Rio Grande-Fort Quitman Watershed and contains one creek (Crazy Cat Arroyo) crossing the route twice. Surface drainage is collected by the MS4 Operator, the COEP. Within the surrounding communities, much of the native vegetation has been replaced with ornamental trees and other vegetation consistent with urban landscaping efforts. The land use along the proposed streetcar route is a mix of commercial, municipal, institutional, residential, and industrial.

This project is needed to improve circulation and accessibility in downtown El Paso and will enhance public transportation and pedestrian mobility. The streetcar plan is included in "Plan El Paso," the comprehensive plan for the COEP's economic development, smart growth, and mobility goals. Plan El Paso was studied by the Texas Department of Transportation (TxDOT) in an initial streetcar feasibility study that showed both market potential and technical viability for a new streetcar route between downtown El Paso and UTEP.

2.1 Nature of Construction Activity

The streetcar construction will be a linear project segmented into phased Work Sites. The proposed construction phasing is identified in the Civil/Track Vol. 1 Drawing No. TC100 through TC175. The final construction approach "means and methods" will be determined with the Construction Contractor. The Contractor will begin and end construction per each phase along a section of the streetcar route. The following are the typical sequence of work activities.

2.1.1 <u>Conflicting Utility Relocation and Early Work Activities</u>

1. Set up SWPPP control measures.
2. Set up advance warning devices for temporary traffic control.
3. Relocate underground utilities identified as being in conflict with track alignment.

4. Trench or bore existing roadway and lay new utility lines, manholes, vaults, conduits, and duct banks as required.
5. Final stabilization of constructed site.
6. Removal of SWPPP control measures.

2.1.2 Primary Guideway Work Activities

1. Set up SWPPP control measures.
2. Set up advance warning devices for temporary traffic control.
3. Perform saw cutting, demolition, and clearing.
4. Excavate area for track slab.
5. Prepare subgrade.
6. Install rail and steel reinforcement in excavated area and construct track slabs.
7. Regrade roadway.
8. Perform mill and overlay on noted roadways.
9. Install station area platforms, signs and striping.
10. Install Overhead Contact System (OCS), street lighting, and permanent signs.
11. Install pavement markings, landscaping, and final finishing.
12. Final stabilization of constructed site.
13. Removal of SWPPP control measures.

2.1.3 Maintenance Storage Facility (MSF) Work Activities

1. Set up SWPPP control measures.
2. Set up advance warning devices for temporary traffic control.
3. Perform demolition and clearing of site.
4. Construction of the MSF.
5. Final stabilization of constructed site.
6. Removal of SWPPP control measures.

2.2 Potential Pollutant Sources

Potential pollutants could include, but are not limited to, soil from construction equipment, material stockpiles, waste concrete, and residual solids from concrete truck and chute cleanout. Concrete curing compounds, oil, grease, paint, gasoline, and other machine fluids leaking from vehicles and construction equipment at the work sites are also potential pollutants. Debris from the demolition of existing facilities and pavement, the water used to aid in the demolition of existing facilities and pavement, and any other chemicals used to prepare the site for construction are potential pollutants. The Contractor is required to provide a list of all substances stored and to specify a storage location on the site maps.

The Contractor would take appropriate measures to prevent, minimize, and control the spill of fuels, lubricants, and other hazardous materials in construction staging areas. All spills generated by the Contractor would be cleaned immediately, and any contaminated soil would be removed from the project and disposed of properly. Designated areas would be identified for spoils disposal and materials storage. The areas would be protected from inflow and runoff. Materials resulting from the removal of existing pavement or other spoils would be stored in these designated areas. All removal or disposal of materials by the Contractor would be conducted in accordance with state and federal laws and by the approval of the Project Engineer.

2.3 Construction Schedule

The streetcar project construction is segmented into phases. The proposed construction phasing is identified in the Civil/Track Vol. 1 Drawing No. TC100 through TC175. Table 2-1 presents a preliminary construction schedule by street section. The Contractor's approved schedule shall ultimately determine the actual sequence of major construction activities. As the Contractor's schedule may change throughout the construction process, the SWPPP scheduling will accordingly be updated.

Table 2-1. Construction Schedule

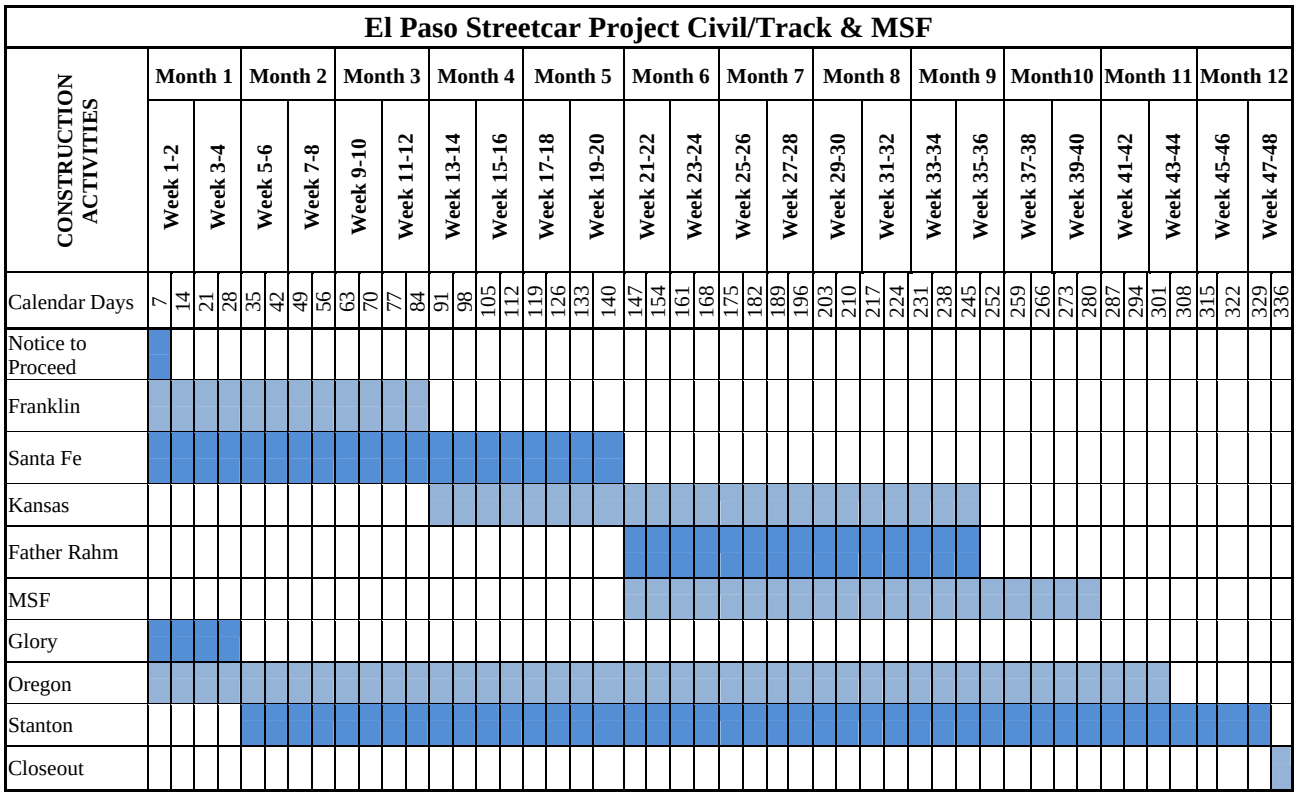

Last Updated: 1/15/2013

2.4 Acreage and Lengths

The streetcar construction will be a narrow and linear Large Construction Activity. Table 2-2 provides the lengths and acreage for each of the street segments. Each segment will be constructed per

construction phase and associated traffic control. Only one construction phase will be allowed per street segment.

Table 2-2. BMP Controls

Street	Street Length feet (miles)	Street Phases	Total Street Area Acre	Average Phase Area Acre
Santa Fe	1600 (0.30)	8	4.1	0.51
Franklin	2772 (0.53)	3	2.6	0.87
Kansas	3500 (0.66)	9	5.7	0.64
Father Rahm	1600 (0.30)	4	2.9	0.73
Glory	500 (0.09)	3	1.2	0.40
Oregon	7649 (1.45)	7	6.9	0.99
Stanton	7800 (1.48)	11	13.1	1.19
MSF	2098 (0.40)	1	2.1	2.1
TOTALS		46	38.6	

2.5 Material Storage

The Contractor is required to provide a list of all stored materials, locations of each stored material, and affected construction site acreage for storing the material. At a minimum, the Contractor must provide the material storage information for waste, borrow, fill, and equipment staging areas.

The Contractor is to update the Detailed Site Maps mentioned in Section 2.8 with the aforementioned material storage data.

2.6 Description of the Soil Type

According to the Soil Survey of El Paso County, Texas, (1971) the predominant soil type found within the proposed action area is Made Land and Gila (Mg Soils) or Delnorte-Canutio Association. Mg Soils are classified as a fine sandy loam and gravelly sandy loam that have well drainage/shrink swell potential, rare flooding, no ponding, and high water capacity. Delnorte-Canutio Association soils are described as very gravelly loam with well drainage/shrink swell potential, no flooding or ponding, and very low water capacity.

2.7 Location Map

The location map showing the general location of the Streetcar site is located in Appendix A.

2.8 Detailed Site Maps

The detailed Site Maps for this Baseline SWPPP are the Civil/Track Vol. 1 Drawings E102 to E170 “Downtown Loop and Stanton-Oregon SWPPP”. The associated Drainage Area Maps are located on Civil/Track Vol. 1 Drawings C600 to C616. These maps contain drainage patterns of major grading activity, proposed disturbed soil areas, locations of all structural controls, and the expected location of temporary Best Management Practices (BMPs).

The Contractor must update and maintain the detailed site maps associated with this SWPPP. The contractor will incorporate into the detailed site maps the locations of all construction support activities including but not limited to material, waste, borrow, fill, equipment storage areas, or vehicle maintenance/wash areas. The contractor shall supplement with additional maps the locations of construction activities not within the plan limits of the detailed site maps.

2.9 Support Activities

Support construction activities, including storage and staging activities, will not be conducted within the linear phased Work Sites. All storm water runoff from support construction work areas will be detained within applicable BMPs located on site as needed to allow sediments and pollutants entrained in the storm water to settle out. The storm water will then be analyzed to determine whether it can be discharged to the open area surrounding the Work Site or whether it will need to be containerized and disposed off site. It shall be the responsibility of the Contractor to provide appropriate sampling of storm water and to discharge according to the EPA, TCEQ, and local regulations.

2.10 Name of Receiving Waters

Locations on the work site adjacent to surface waters, wetlands, or other environmentally sensitive areas, or off-site areas subject to vehicular tracking of sediments will receive the highest maintenance priority, followed by the protection of drainage ways and MS4 inlets and outfalls. Table 2-2 provides information on the impacted receiving waters.

Table 2-2. Impacted Receiving Waters

Name of Receiving Water	Will Receiving Water Be Disturbed?	Location of Receiving Water
Mesilla Bolson Aquifer	No	Subsurface
Rio Grande	No	Located to the west and south of the site. The nearest distance is to the south of the site (0.4 mile).
Crazy Cat Arroyo	Yes	Crossing Stanton and Oregon Streets, between Kerby Street and Boston Street.
City of El Paso MS4	Yes	Throughout the Project

2.11 Conditions for Authorization of CGP

Primary operators of the Streetcar Construction Project must meet the following conditions.

1. Implement the Baseline SWPPP. Provide information updates and maintain the SWPPP throughout the project.
2. Primary operators must submit an NOI to TCEQ for stormwater discharges per the CGP. Appendix B "Notice of Intent (NOI)" contains instructions for submitting the NOI. The Contractor shall update Appendix B to include the signed NOI.
3. All operators of a large construction activity must post a site notice in accordance with Section 1.5. The site notice must be located where it is safely and readily available for viewing by the general public and local, state, and federal authorities prior to commencing construction, and must be maintained and relocated as necessary until completion of

construction activity. Appendix C "Large Construction Site Notice" contains the sample notice to be updated by the Contractor.

4. The primary operator must provide a copy of the signed NOI to the MS4 Operator "COEP" and to any secondary construction operator. The Contractor shall list in the SWPPP the names and addresses of all MS4 operators receiving a copy.
5. Secondary operators are regulated under the primary operator's NOI unless covered by another NOI.
6. All secondary operators must provide a copy of the signed and certified Secondary Operator construction site notice to the operator of the MS4 "COEP" receiving the discharge prior to commencement of construction activities. Appendix D "Subcontractor Certification/ Agreements" contains a sample format of the required SWPPP documentation.

3.0 Description of BMPs

The BMPs presented in this SWPPP have been designed to detain sediment on site, prevent erosion, and maintain the site appropriately. The application of each BMP control is based on the anticipated type and sequence of construction activities, topography, soil type, and rainfall. The Contractor is responsible for ensuring that BMP controls are installed as depicted in the plans. If the controls fail to perform as originally intended, it is the responsibility of the Contractor to develop, propose, and install alternate BMP controls that will appropriately control the off-site transport of sediment and pollutants.

The locations for the BMP controls selected for the El Paso Streetcar Project are provided in Civil/Track Vol. 1 Drawings E102 to E170. BMP Factsheets developed by North Central Texas Council of Governments (NCTCOG) Integrated Storm Water Management (iSWM) are provided in Appendix E NCTCOG iSWM.

3.1 Erosion BMP Controls

Erosion control, also referred to as soil stabilization, consists of source control measures that are designed to prevent soil particles from detaching and becoming transported in storm water runoff. Erosion BMP controls protect the soil surface by covering and/or watering soil particles. This project will incorporate erosion control measures required by the contract documents and other measures identified within the SWPPP.

3.2 Sediment BMP Controls

Sediment controls are structural measures that are intended to complement and enhance the selected erosion control measures and reduce sediment discharges from active construction areas. Sediment controls are designed to intercept and settle out soil particles that have been detached and transported by the force of water. All storm water runoff from will be detained within each phased Work Site as appropriate and then analyzed to determine whether it can be discharged to the open area surrounding the Work Site or whether it will need to be containerized and disposed off site.

3.3 BMP Controls

Sufficient erosion and sediment control materials will be maintained on site to allow for implementation in conformance with state/local regulations and as described in this SWPPP. Other practices providing effective temporary and final erosion control during construction are:

1. Preserve existing vegetation where required and when feasible.
2. The area of soil-disturbing operations shall be controlled such that the Contractor is able to implement erosion control BMPs quickly and effectively.
3. After construction and final stabilization are completed, the removal of temporary BMP controls should not allow any of the accumulated silt to remain.

Table 3-1 indicates the BMP controls that may be used on the project site. The Contractor may propose additional BMP controls.

Table 3-1. BMP Controls*

BMP	Practice/Location On-Site	Implementation
Tree Protection	Tree fencing and stem wrap.	Per plans.
Geotextile Fabric, Plastic Cover	Implemented on all stockpiles and disturbed work sites when not in use.	Throughout the project as needed.
Triangular Filter Dike, Erosion Control Log, Silt Fence	Place downstream of disturbed site.	Per plans.
Drain Inlet Protection	Around or upstream of storm drains, drop inlets, and curb inlets.	Per plans.
Earthen Dike	Installed along Work Site perimeters to direct storm water runoff to proper BMP control	Throughout the project as needed.
Sediment Basin, Sediment Trap	As needed.	Throughout the project as needed.
Stabilized Construction Entrance/Exit	Installed at each ingress and egress point of each Work Site.	Minimum one per construction phase.
Pavement / Street Sweeping and Vacuuming	Vehicle tracking or other construction related fugitive soil dust. Will be implemented at linear Work Sites and along the Contractor's haul routes.	Throughout the project as needed.
Tracking Controls	All ingress/egress points.	Throughout the project as needed.
Watering	For dust control.	Throughout the project as needed.
Vegetation	Establish natural cover through hydro-mulching, seeding, or sod placement	MSF, throughout the project as needed

*Factsheets for all pertinent BMPs are provided in Appendix E.

3.3.1 Tree Protection

Construction activities can cause irreparable damage to adjacent trees. It is important that the trees near the construction Work Sites be protected to ensure the longevity of tree vegetation in the COEP. All city trees shall be considered and protected as vital city infrastructure. Tree protection has been designated throughout the entire construction site. It is the Contractor's responsibility to protect any tree within 10 feet of a work zone.

3.3.2 Geotextile Fabric and Plastic Covers

Geotextiles fabric and plastic covers may be used to stabilize disturbed soil areas and protect soils from erosion by wind or water. These measures are used when disturbed soils may be particularly difficult to

stabilize, such as on steep slopes where the erosion potential is high. Covers will be used to protect stockpiles and will be firmly held in place.

3.3.3 Silt Fence, Triangular Filter Dike, Erosion Control Log

Silt fencing consists of geotextile fabric supported by wire mesh netting or other backing, stretched between metal posts, with the lower edge of the fabric securely embedded 6 inches in the soil. Silt fencing provides both filtration and time for sediment settling by reducing the velocity of the runoff. A Triangular Filter Dike is a self-contained silt fence consisting of filter fabric wrapped around welded wire fabric and shaped into a triangular cross section. While similar to a silt fence, a dike is reusable, sturdier, transportable, and can be used in situations where it is impractical to install embedded posts for support. An Erosion Control Log is comprised of an open weave, mesh tube that is filled with a filter material.

The aforementioned three BMP controls detain flow and capture sediment as linear controls along the downslope of a disturbed area. These types of BMP controls are required for all down slope boundaries deemed appropriate as dictated by individual site conditions.

3.3.4 Inlet Protection

Inlet protection consists of intercepting sediment through the use of depressed grading upstream of a storm drain, drop inlet, or curb inlet. Inlet protection temporarily ponds runoff before it enters the storm drain, allowing sediment to settle. Additional protection devices may be placed around or across the inlet openings to provide additional sediment and floatable material detention.

3.3.5 Earthen Dikes

Earthen dikes, when needed, will be maintained around the perimeter of the Work Site. These earthen dikes will be adequate to completely contain construction area storm water accumulation and prevent run-on from surrounding areas.

In addition, earthen dikes will be placed around stockpile areas to prevent the flow of runoff and sediment from impacted soils from contacting non-impacted soil within the Work Site. BMPs will be carefully sized and located.

3.3.6 Sediment Traps

Sediment traps are used to temporarily detain sediment-laden runoff to allow sediment to settle out under quiescent conditions before the runoff is discharged, treated, or disposed. Sediment basins are not appropriate for this project.

Will the project disturb 10 acres or more at one time?	Yes ☐	No ☒	
If yes, is it feasible to install a sediment basin?	Yes ☐	No ☒	N/A

Although the project will not disturb more than 10 acres at one time, and therefore, will not require sediment basins, storm water runoff from any disturbed area will not be permitted to leave the site due to impacted soil conditions. Therefore, sediment traps may be implemented within the Work Site as appropriate to detain storm water prior to treatment or disposal off site. The Contractor shall document the application of sediment basins or sediment traps in the SWPPP.

3.3.7 Stabilized Construction Exit

A stabilized construction exit is a pad of crushed stone, recycled concrete, or other rock material placed on geotextile fabric used to dislodge sediment and pollutants from construction equipment tires prior to exiting the construction site. A stabilized construction exit will be installed and maintained at the ingress/egress point of each Work Site. The main objective is to minimize the tracking of soil onto public roadways where it will be suspended by storm water runoff. At a minimum, one construction exit will be required for each Work Site. Ingress and egress from a Work Site will be required via a construction exit. Aggregate will be removed and sediment will be disposed if the construction exit is clogged.

3.3.8 Street Sweeping and Vacuuming

Street sweeping and vacuuming will be implemented to prevent sediment from tracking onto paved surfaces. Throughout the duration of the project, ingress/egress points as well as haul routes will be inspected daily for sediment tracking and swept as needed; at a minimum, at the end of each work day. Care will be taken to not sweep up unknown substances or objects that may be potentially hazardous. Sweeper wastes will be properly stored and disposed.

3.3.9 Tracking Controls

Tracking controls will be implemented throughout the duration of the project, at all access (ingress/egress) points where vehicles and/or equipment may track sediment from the Work Site. The above BMPs have been selected to reduce sediment tracking from the Work Site and will be implemented in accordance with the BMP Factsheets provided in Appendix D and as described herein.

3.3.10 Watering Soil Surfaces

Water is applied to base soil surfaces to temporarily decrease the amount of soil lost to wind and water erosion. Watering of soil surfaces is also effective for temporary berms and stockpiles.

3.3.11 Vegetation

Vegetation is the sowing or sodding of grasses, small grains, or legumes to provide temporary and final stabilization for disturbed areas. As a final stabilization control, vegetation provides good protection from erosion along with some filtering for overland runoff. Vegetation can provide a positive method of long-term storm water management as well as good aesthetics to the site.

Other BMP controls may be required to assist during the establishment of vegetation. These other controls include: geotextile fabrics, swales, and dikes to direct flow around newly seeded areas and proper grading to limit runoff velocities during construction.

3.4 Site Housekeeping

Table 3-2 lists the good housekeeping practices that will be implemented to limit the off-site transport of litter, construction debris, and construction materials.

Table 3-2. Good Housekeeping Practices *

Good Housekeeping Activity	Location(s) On-Site
Construction Debris Controls/Waste Management	
Concrete Truck Wash Out	Concrete placement throughout the site.
Solid Waste Management	A covered dumpster will be maintained at the Work Site. A trash receptacle will be maintained at break areas.
Contaminated Soil Management	Staging/stockpile and work areas.
Sanitary/Septic Waste Management	Outside of Work Site away from vehicle and equipment traffic.
Construction Material Controls	
Material Delivery and Storage	Staging areas within the Work Site.
Material Use	
Stockpile Management	
Spill Prevention and Control	

*Factsheets for all pertinent BMPs are provided in Appendix E.

Waste management consists of implementing procedural and structural BMPs for collecting, handling, storing, and disposing of wastes generated by a construction project to prevent the release of waste materials into storm water. Wastes are going to be generated during construction; however, the methods by which the wastes are collected, stored, and removed will determine the success of the waste management activities.

Table 3-3 identifies construction and waste materials storage locations at each Work Site.

Table 3-3. Construction and Waste Materials Storage Sites

Materials Stored On-Site	Location On-Site	Controls Used to Prevent Pollutants
Impacted Soil	Various locations within the Work Site as construction progresses. CONTRACTOR TO UPDATE	Earth berm surrounding the stockpile; plastic cover when not in use.
Backfill Material		Plastic cover.
Equipment/Vehicle Fuels		Earth berm surrounding the Work Site will prevent spills from leaving the site prior to clean up.

The BMP Factsheets provide detailed information on the key considerations, applications, and design criteria (see Appendix E).

3.4.1 Concrete Truck Wash Out Requirements

Washing of Concrete Trucks at the construction sites is allowed provided the following requirements are met. Authorization is limited to the land disposal of wash-out water from concrete trucks.

- Direct discharge of concrete truck wash-out water to surface water in the state, including discharge to storm sewers, is prohibited by the CGP.
- Concrete truck wash-out water shall be discharged to areas at the construction site where structural controls have been established to prevent direct discharge to surface waters, or to areas that have a minimal slope that allow infiltration and filtering of wash-out water to prevent direct discharge to surface waters. Structural controls may consist of earth dikes,

temporary shallow pits, temporary storage tanks, or other reasonable measure to prevent runoff from the construction site.

- Wash out of concrete trucks during rainfall events shall be minimized. The direct discharge of concrete truck wash-out water is prohibited at all times, and the operator shall ensure that its BMPs are sufficient to prevent the discharge of concrete truck wash out as the result of rainfall or stormwater runoff.
- The discharge of wash-out water must not cause or contribute to groundwater contamination.
- The contractor is to update the Detailed Site Maps with the location of the concrete wash outs.

3.4.2 Solid Waste Management

Solid waste management BMPs are designed to prevent or reduce the discharge of pollutants via storm water from solid or construction waste by providing designated waste collection areas and containers, arranging for regular disposal, and training employees and subcontractors.

- Employees and subcontractors will be educated on solid waste storage and disposal procedures.
- Dumpsters of sufficient size and number will be provided to contain solid waste generated by the project and serviced with adequate frequency to preclude overfilling or windblown debris.
- Littering on the Work Site will be prohibited.
- Construction debris and waste will be removed from the Work Site every 2 weeks at a minimum.
- Potentially hazardous waste will be segregated from non-hazardous construction waste.

3.4.3 Hazardous Waste Management

Hazardous waste management BMPs prevent or reduce the discharge of pollutants to storm water from hazardous waste through proper material use, waste disposal, and training of employees and subcontractors. Production or generation of hazardous materials and hazardous waste (other than impacted soil) is not anticipated. However, should the generation of hazardous waste occur on site, the following procedures will be followed:

- Wastes will be stored in sealed containers constructed of suitable material.
- Drums will not be overfilled, and wastes will not be mixed.
- All hazardous waste containers will be clearly labeled, identifying the waste being stored and the date of accumulation.
- Potentially hazardous waste materials will not be allowed to accumulate on the ground.
- Waste will be disposed by a licensed hazardous waste transporter.
- Rainwater that may have been mixed with hazardous waste will be properly disposed.

- Waste storage areas will be kept clean, well-organized, and equipped with ample clean-up supplies.
- Waste storage areas will be inspected regularly.
- Hazardous spills will be cleaned up in conformance with the applicable Materials Safety Data Sheets (MSDS) and reported to the Construction Manager.

3.4.4 Impacted Soil Management

Contaminated/impacted soil management BMPs prevent or reduce the discharge of pollutants to storm water from impacted soil through pre-construction surveys and regular inspections of excavations.

- Employees and subcontractors will be educated in identification of impacted soil and on handling and disposal procedures for impacted soil.
- On-site storage of impacted soils will be minimized.
- If temporary stockpiling is necessary:
  - A dike will be installed around the stockpile to prevent runoff from leaving the area.
  - The stockpile will be covered by plastic when not in use.
- Water from decontamination procedures will be collected, treated, and/or properly disposed.
- Impacted soil will be transported by truck from the Work Site. While in transport, the impacted soil will be covered and at no time will be exposed to storm water.
- Excavation, transport, and disposal of impacted material and hazardous material will be in accordance with the federal, state and local regulations.

3.4.5 Wind Erosion Control

Wind erosion control BMPs will be implemented throughout the duration of the Project on all disturbed soils and stockpiles on the Work Sites. The objective of wind erosion control is to prevent the transport of soil and dust from disturbed areas and stockpiles off-site by wind.

The following practices have been selected to control dust from the Work Site:

- Minimization of disturbed area;
- Wet suppression (watering);
- Plastic covers or non-toxic plant-material-based, cementitious-based, or polymeric emulsion blend dust suppression on stockpiles;
- Temporary gravel construction exits;
- Reduced vehicle and equipment speed; and
- Haul truck covers.

These practices will be implemented to provide dust control and prevent discharges from dust control activities and water supply equipment. Water application rates will be minimized as necessary to prevent runoff and ponding, and water equipment leaks will be repaired immediately. Detained storm water from impacted areas will not be used for dust control activities on clean import fill, overburden stockpiles, or disturbed areas in which impacted soil has been removed and backfilled.

3.4.6 Sanitary/Septic Waste Management

Proper sanitary and septic waste management prevents the discharge of pollutants to storm water from sanitary and septic waste by providing convenient, well-maintained facilities and arranging for regular service and disposal.

- Employees, subcontractors, and suppliers will be educated with regard to sanitary/septic waste storage and disposal procedures.
- Temporary sanitary facilities will be located away from storm water drainage systems, receiving waters, and traffic circulation. Sanitary/septic facilities will be maintained in good working order by a licensed service.

3.4.7 Liquid Waste Management

The management of liquid wastes such as rinse or wash waters are critical to the prevention of the discharge of pollutants from construction sites. Wash water generated by construction activities will be collected, containerized, and properly disposed.

- Do not allow liquid wastes to flow or discharge in an uncontrolled manner.
- Contain liquid wastes in a controlled area such as a holding pit, sediment basin, roll-off bin, or portable tank.
- Containment devices must be of sufficient quantity or volume to completely contain the liquid wastes generated.
- Capture all liquid wastes running off a surface that have the potential to affect the storm drainage system.
- If the liquid waste is sediment-laden, use a sediment trap.
- Instruct employees and subcontractors on how to safely differentiate between non-hazardous liquid waste and potential or known hazardous liquid waste.

3.4.8 Material Delivery and Storage

Material delivery and storage BMPs prevent, reduce, or eliminate the discharge of pollutants from material delivery and storage to the storm water system or receiving waters through minimizing the storage of hazardous materials on-site, storing materials in a designated area, installing secondary containment, conducting regular inspections, and training employees and subcontractors. The following procedures will be followed:

- Employees and subcontractors will be trained with regard to proper materials delivery and storage practices.
- Temporary storage areas will be located away from vehicular traffic.
- Material Safety Data Sheets (MSDS) will be kept on-site for all materials stored.
- In the event of spills or leaks, accumulated rainwater and spills will be collected, placed into drums, and sent to an approved disposal site.
- Materials will be stored in their original containers.
- Hazardous chemicals, drums, or bagged and boxed materials will be stored on pallets.
- The material inventory stored on site will be minimized.
- Storage instructions will be posted at all times in an open location.
- The storage area will be inspected before and after rainfall events.

3.4.9 Material Use

Material use BMPs prevent or reduce the discharge of pollutants to the storm drain system or receiving waters through the use of alternative products, minimizing hazardous material use on site, and training employees and subcontractors. The following procedures will be used:

- Recycled and less hazardous products will be used when practical.
- Employees will be trained in spill cleanup procedures.
- An ample supply of clean-up materials will be kept near use areas.
- Applied materials will not be exposed to rainfall and runoff unless a sufficient time has been allowed for them to dry.
- Employees and subcontractors will be subjected to spot checks to ensure appropriate practices are being implemented.

3.4.10 Stockpile Management

Stockpile management procedures are designed to reduce or eliminate air and storm water pollution generated from stockpiles of impacted soil, clean fill material, paving materials such as Portland cement, concrete rubble, asphalt concrete, asphalt concrete rubble, aggregate base, aggregate subbase or pre-mixed aggregate, asphalt binder ("cold mix" asphalt), and pressure-treated wood.

- Wind erosion control practices (i.e., soil stabilizers, plastic covering, etc.) will be implemented on all stockpiled materials.
- Soil stockpiles will be covered or protected with soil stabilization measures and a temporary perimeter sediment barrier at all times.

3.4.11 Spill Prevention and Control

Spill prevention and control BMPs prevent or reduce the discharge of pollutants to drainage systems or receiving waters from leaks and spills by reducing the chance for spills, stopping the source of spills, containing and cleaning up spills, properly disposing of spill materials, and training employees.

- Spills will not be buried or washed with water.
- Used clean-up materials and impacted materials will be properly stored and disposed.
- Water used for cleaning and decontamination will be contained, collected, and disposed in accordance with this SWPPP.
- Proper storage, clean-up, and spill reporting instructions for hazardous materials stored or used on Work Sites will be posted at all times in an open location.
- Waste storage areas will be kept clean, well-organized, and equipped with ample clean-up supplies.

3.5 Non-Storm Water Controls

Non-storm water discharges consist of all discharges that do not originate from precipitation events (i.e., discharges other than storm water). Non-storm water discharges from the Work Site are prohibited unless authorized under the CGP. In addition, an authorized non-storm water discharge will not be a source of pollutants to receiving waters, and appropriate BMPs will be implemented to minimize adverse impacts from these discharges. Table 3-4 identifies all non-storm water discharges within the Work Site.

Table 3-4. Non-Storm Water Discharges

Eligible Non-Storm Water Discharge	Used? Yes	Used? No	Location	Pollution Prevention Measure(s)	Implementation Date
Fire Fighting Activities	☐	☒			
Fire Hydrant Flushings	☒	☐	Water Utility Relocations	Sediment laden water will be filtered prior to stormwater discharge.	As needed
Washing of Vehicles, Buildings, or Pavement without detergents or soap	☒	☐	As needed	Sediment laden water will be filtered prior to stormwater discharge.	As needed
Dust Control	☒	☐	Throughout the Work Site excavation area	Water application rates will be minimized as necessary to prevent runoff and ponding; water equipment leaks will be repaired immediately.	At commencement of construction activity
Potable Water Sources (water line flushings)	☒	☐	Water Utility Relocations	Hyperchlorinated Water will be discharged appropriately	As needed
Air Conditioning Condensate	☒	☐	Work Site office trailer adjacent to the excavation area	Air conditioning condensate will be directed away from the Work Site area	At commencement of construction activity
Uncontaminated Ground/Spring Water	☐	☒			
Lawn watering / Irrigation Drainage	☐	☒			
Other? (List)	☐	☐			

Non-storm-water BMPs shall be implemented in conformance with the following guidelines. The narrative in the body of the SWPPP prevails over guidance in the BMP Factsheets. Table 3-5 identifies non-storm-water BMPs implemented on site.

Table 3-5. Non-Storm Water Controls*

BMPs Installed *	Location(s) On-Site	Maintenance Schedule
Water Control and Conservation	Water Control and Conservation BMPs will be implemented while implementing dust control and stockpile management BMPs site-wide.	Inspect BMPs subject to non-storm-water discharges daily while non-storm-water discharges are occurring. Repair water equipment as needed to prevent unintended discharges. - Water trucks, Water reservoirs, Irrigation systems, Hydrant connections
Vehicle and Equipment Cleaning	Only decontamination of vehicles and equipment in contact with impacted soil will be permitted	The tire wash will be inspected routinely for damage and will be repaired as needed.
Vehicle and Equipment Fueling	Vehicle and Equipment Fueling BMPs will be implemented within the staging area.	Vehicles and equipment will be inspected for leaks on each day of use; leaks will be repaired immediately or problem vehicles or equipment will be removed from the Work Site.
Vehicle and Equipment Maintenance	Vehicle and Equipment Maintenance BMPs will be implemented within the staging area.	Vehicle and equipment maintenance areas will be inspected regularly; vehicles and equipment will be inspected for leaks on each day of use; leaks will be repaired immediately.

*Factsheets for all pertinent BMPs are provided in Appendix E.

3.5.1 Water Control and Conservation

Water conservation practices are activities that use water during the construction of a project in a manner that avoids causing erosion and the transport of pollutants off site. The implementation of these practices can reduce or eliminate non-storm water discharges.

- Water equipment will be inspected weekly and kept in good working condition.
- Water leaks will be repaired promptly.
- Water will not be used to clean pavement or construction areas. Paved areas will be swept and vacuumed.
- Vehicle and equipment washing on the Work Site will be discouraged except for the decontamination of vehicles and equipment that have been in contact with impacted soil.

3.5.2 Vehicle and Equipment Cleaning

Vehicle and equipment cleaning procedures and practices will eliminate or reduce the discharge of pollutants to storm water from vehicle and equipment cleaning operations. Procedures and practices include, but are not limited to: using off-site facilities; washing in designated, contained areas only; and training employees and subcontractors in proper cleaning procedures.

- On-site vehicle and equipment washing will be discouraged except for the decontamination of vehicles and equipment that have been in contact with impacted soil. All other vehicle or equipment, washing will be conducted off-site.
- Vehicle and equipment wash water will be will be collected, containerized, and properly disposed.

3.5.3 Vehicle and Equipment Fueling

Vehicle equipment fueling procedures and practices are designed to prevent fuel spills and leaks and reduce or eliminate contamination of storm water by using off-site facilities, fueling in designated areas only, enclosing or covering stored fuel, implementing spill controls, and training employees and subcontractors in proper fueling procedures.

- All mobile fueling of construction equipment will be minimized and conducted within the Work Site. On-site vehicle and equipment fueling will only be used where it is impractical to send vehicles and equipment off site for fueling.
- When fueling must occur on site, a fueling area will be designated, and the location of the fueling area may vary as construction activities progress.
- Absorbent spill clean-up materials and spill kits will be available in the fueling area and on fueling trucks and will be disposed of properly after use.
- Drip pans or absorbent pads will be used during vehicle and equipment fueling, unless the fueling is performed over an impermeable surface in a dedicated fueling area.
- Dedicated fueling areas will be protected from storm water run-on and runoff, and will be located at least 50 feet from downstream drainage facilities and receiving waters. Fueling will be performed on a level-grade area.
- Nozzles used in vehicle and equipment fueling will be equipped with an automatic shut-off to control drips. Fueling operations will not be left unattended.
- The fueling area will be protected with dikes to prevent run-on/runoff and to contain spills.
- Vapor recovery nozzles will be used to help control drips. Nozzles will be secured upright when not in use.
- Fuel tanks will not be “topped-off.”
- Vehicles and equipment will be inspected for leaks on each day of use. Leaks will be repaired immediately or problem vehicles or equipment will be removed from the Work Site.
- An ample supply of absorbent spill clean-up materials will be available in fueling and maintenance areas and used on small spills instead of hosing down or burying techniques.
- Spills will be immediately cleaned. The spent absorbent material will be removed promptly and disposed properly.
- Federal, state, and local requirements will be observed for stationary aboveground storage tanks, as appropriate.
- Fueling areas and storage tanks will be inspected regularly.

3.5.4 Vehicle and Equipment Maintenance

The best option to prevent or reduce storm water pollution from vehicle and equipment maintenance activities is to perform vehicle and equipment maintenance activities at an off-site facility. If this option

is not available, maintenance will be performed in designated areas only, while providing cover for materials stored outside, checking for leaks and spills, and containing and cleaning up spills immediately.

- Off-site maintenance facilities will be used whenever practical.
- Waste fluid containers will be maintained in a leak-proof condition.
- Vehicle and equipment maintenance areas will be inspected regularly.
- Vehicles and equipment will be inspected for leaks on each day of use; leaks will be repaired immediately.
- Drip pans or absorbent pads will be used during vehicle and equipment maintenance work that involves fluids, unless the maintenance work is performed over an impermeable surface in a dedicated maintenance area.
- Maintenance areas will have spill kits and/or use other spill protection devices.
- Dedicated maintenance areas will be protected from storm water run-on and runoff and will be located at least 50 feet from downstream drainage facilities and receiving waters.
- Absorbent spill clean-up materials will be available in maintenance areas and will be properly disposed after use.
- Used oils, fluids, lubricants, and spill clean-up materials will be properly disposed.
- Fuels and lubricants will not be dumped onto the ground.
- Used batteries will be properly disposed or recycled and will be placed in secondary containment until disposed off site.
- Fluid and oil leaks will be repaired immediately.
- Spill containment dikes or secondary containment will be provided around stored oil and chemical drums.

3.6 Permanent Storm Water Controls

Immediately upon completion of the construction phase area, the areas will be permanently stabilized with the following practices: asphalt/concrete parking lots, driveways, walkways, entrances, concrete curb/gutter and vegetation. The designated vegetative areas for the MSF will reach final stabilization when the established vegetative cover is over 70%.

3.7 BMP Management

3.7.1 <u>Scheduling</u>

BMP controls will be initiated as soon as practicable in portions of the work site where construction activities are occurring. BMPs will be deployed in a sequence to follow the progress of demolition, grading, and construction. As the phased construction locations of soil disturbance change, erosion and sediment controls will be adjusted accordingly to manage storm water runoff.

A responsible party will be identified to monitor weather using National Weather Service reports to track conditions and alert crews to the onset of rainfall events. National Weather Service updates for the COEP can be found at http://www.srh.noaa.gov/elp/. This web site shall be consulted on a daily basis for the weather forecasts.

Non-active disturbed soil areas will be stabilized with temporary or permanent erosion control within 14 days from the cessation of soil-disturbing activities or one day prior to all forecasted rain events, whichever comes first.

Earthen dikes when applicable will be installed to completely segregate and isolate active construction areas from other areas of the Work Site. These earthen dikes will be adequate to completely contain construction area storm water accumulation and prevent run-on from surrounding areas.

3.7.2 Visual Monitoring

Visual monitoring includes observations and inspections. Inspections of BMPs are required to identify and record BMPs that need maintenance to operate effectively, that have failed, or that could fail to operate as intended. Visual observations of the site are required to observe storm water drainage areas to identify any spills, leaks, or uncontrolled pollutant sources.

It is especially important to define how the site will interpret the qualifying rain event trigger for inspections required prior to a qualifying event since a qualifying event is only known once it has been completed. The most conservative interpretation is to inspect the site every time rain is predicted regardless of the probability of precipitation or predicted rain fall amount (if available).

Visual observations and photographs of the site and inspections of BMPs are required prior to a qualifying rain event, following a qualifying rain event, and every 24-hour period during a qualifying rain event. Pre-rain inspections will be conducted after consulting National Oceanic and Atmospheric Administration (NOAA) and determining that a precipitation event with a 50% or greater probability of precipitation has been predicted.

3.7.3 Maintenance Procedures

All BMP controls will be maintained in effective working order. If repair, replacement, or cleaning of a BMP control is required, it will be addressed as soon as practical before the next expected rainfall event and no later than 7 days following the observation. The Contractor shall incorporate a log of maintenance activities such as repair, replacement, cleaning, and the execution of BMPs.

Sediment must be removed from sediment traps before the sediment reaches 50% of the above-ground height. If sediment escapes the site, accumulations must be removed at a frequency that minimizes off-site impacts, and prior to the next rain even, if feasible.

3.7.4 Inspections

The Contractor must conduct inspections at least once every 7 days. The inspection must occur on a specifically defined day, regardless of whether there has been a rainfall event since the previous inspections.

Inspections will be performed before and after storm events and once each 24-hour period during extended storm events to identify BMP effectiveness and implement repairs of design changes as soon as feasible, depending upon field conditions. Sufficient equipment, materials, and personnel will be available for rapid response to failures and emergencies. All corrective maintenance to BMPs will be performed as soon as possible after the conclusion of each storm depending upon worker safety.

The Contractor's Environmental Manager must inspect all disturbed areas of the construction site that have not reached final stabilization. The inspection shall cover all areas where materials are stored and stockpiled, areas where vehicles enter and exit the work sites, and areas where temporary and permanent soil stabilization practices have been implemented, but have not yet reached final stabilization. All structural erosion and sediment control practices and BMPs shall be inspected to ensure that they have been installed correctly, are operating properly, and are sufficient in reducing sediments from traveling off site.

Should an inspection or other observation indicate that a BMP has been damaged, used incorrectly, or is performing inadequately, it will be replaced or modified as soon as practical before the next expected rainfall event and no later than 7 days following the observation. Should the installation, maintenance, placement, or repair of a BMP require longer than the permitted 7 days, the Contractor will implement a BMP control that will temporarily address the problem, and implement an inspection schedule for the BMP. The Contractor will include a statement in the Contractor's BMP Documentation describing the situation and the reason why the situation cannot be addressed within the allotted 7 days. The Contractor shall install all BMP controls and conduct maintenance as is necessary to ensure compliance with TPDES General Permit Number TXR150000.

The Contractor shall develop a report summarizing the scope of the inspection, the names and qualification of personnel conducting the inspection, and the date of the inspection. Major observations relating to the implementation of the SWPPP will be made and retained as part of the SWPPP.

Major observations will include:

1. Locations of discharges of sediment or other pollutants from the site;
2. Locations of BMPs that need to be maintained;
3. Locations of BMPs that failed to operate as designed or proved inadequate for a particular location; and
4. Locations where additional BMP controls are needed.

Actions taken as a result of inspections must be described and retained as part of the SWPPP. Reports must identify any incidents of non-compliance. Where a report does not identify any incidents of non-compliance, the report must contain certification that the site is in compliance with the SWPPP and TCEQ TDPES General Permit TXR150000. The inspection report must be signed by the Contractor's Environmental Compliance Manager, who has been delegated signature authority as required in 30 TAC Section 305.128 (relating to signatories for reports).

3.8 Amendments to the SWPPP

The Contractor, as the Operator with day-to-day control of the site, shall be delegated the responsibility of making all necessary amendments to the SWPPP. The Contractor must revise or update the SWPPP whenever the following occurs:

1. A change in design, construction, operation, or maintenance that has a significant effect on the discharge of pollutants and that has not been previously addressed in the SWPPP.

2. Changing site conditions based on updated plans and specifications, new operators, new areas of responsibility, and changes in BMP controls.

3. The result of inspections or investigations by site operators, operators of the MS4, authorized TCEQ personnel, or a federal, state, or local agency approving sediment and erosion plans indicated the SWPPP is proving ineffective in eliminating or significantly minimizing pollutants in discharges authorized under the TPDES General Permit No. TXP150000.

Amendments shall be logged and incorporated to the base SWPPP.

3.9 BMP Documentation

The contactor must ensure that the SWPPP is consistent with requirements specified in all contractual project documentation (Project Contract, Specifications, and Construction Drawings), El Paso County Stormwater Management Plan, or associated federal, state, and local permits.

The Contractor must submit for approval all SWPPP Documentation required in this SWPPP Report to the construction manager. The contractor shall update Appendix F “SWPPP Management Logs“ with appropriate logs and forms.

3.10 Retention of Records

The Primary Operator will retain the following SWPPP records for a minimum of three years from the date that a Notice of Termination (NOT) is submitted.

1. A copy of the SWPPP.

2. All reports and actions required by the CGP.

3. A copy of the Construction Site Notice.

4. All data used to complete the NOI.

5. All records of submittal of forms submitted to the operator of any MS4 receiving the discharge and to the secondary operator.

3.11 Limitations

The recommendations provided in this report consist of opinions and conclusions of the consulting engineer. The only warranty or guarantee made by the consultant, in connection with the service of

preparing this SWPPP, is that such services are performed with the care and skill ordinarily exercised by members of the profession, practicing under similar conditions, at the same time, and in the same or similar locality. No other warranty, expressed or implied, is made or intended by rendering such consulting services or by furnishing written reports of the findings. However, any deviation from the above recommendations may nullify the purpose of this report, as may variations in climate or environmental conditions.

4.0 References

Texas Commission on Environmental Quality (TCEQ), Texas Pollutant Discharge Elimination System (TPDES) General Permit No. TXR150000, February 15, 2008. http://www.tceq.texas.gov/assets/public/permitting/stormwater/txr150000.pdf

Texas Department of Transportation (TxDOT), Non-FHWA Categorical Exclusion, El Paso Streetcar, Limits: On Oregon Street and Stanton Street; November 2012.

North Central Texas Council of Governments (NCTCOG), Integrated Storm Water Management (iSWM) Technical Manual: Construction Controls, April 2010. http://iswm.nctcog.org/Documents/technical_manual/Construction_Controls_4-2010b.pdf

Environmental System Research Institute (ESRI), Inc.'s. ArcMap Version 9.3.1 2009

ESRI 13 Imagery Prime World @d from online ArcGIS Map Service. http://services.arcgisonline.com/arcgis/services.

Appendix A

Location Map

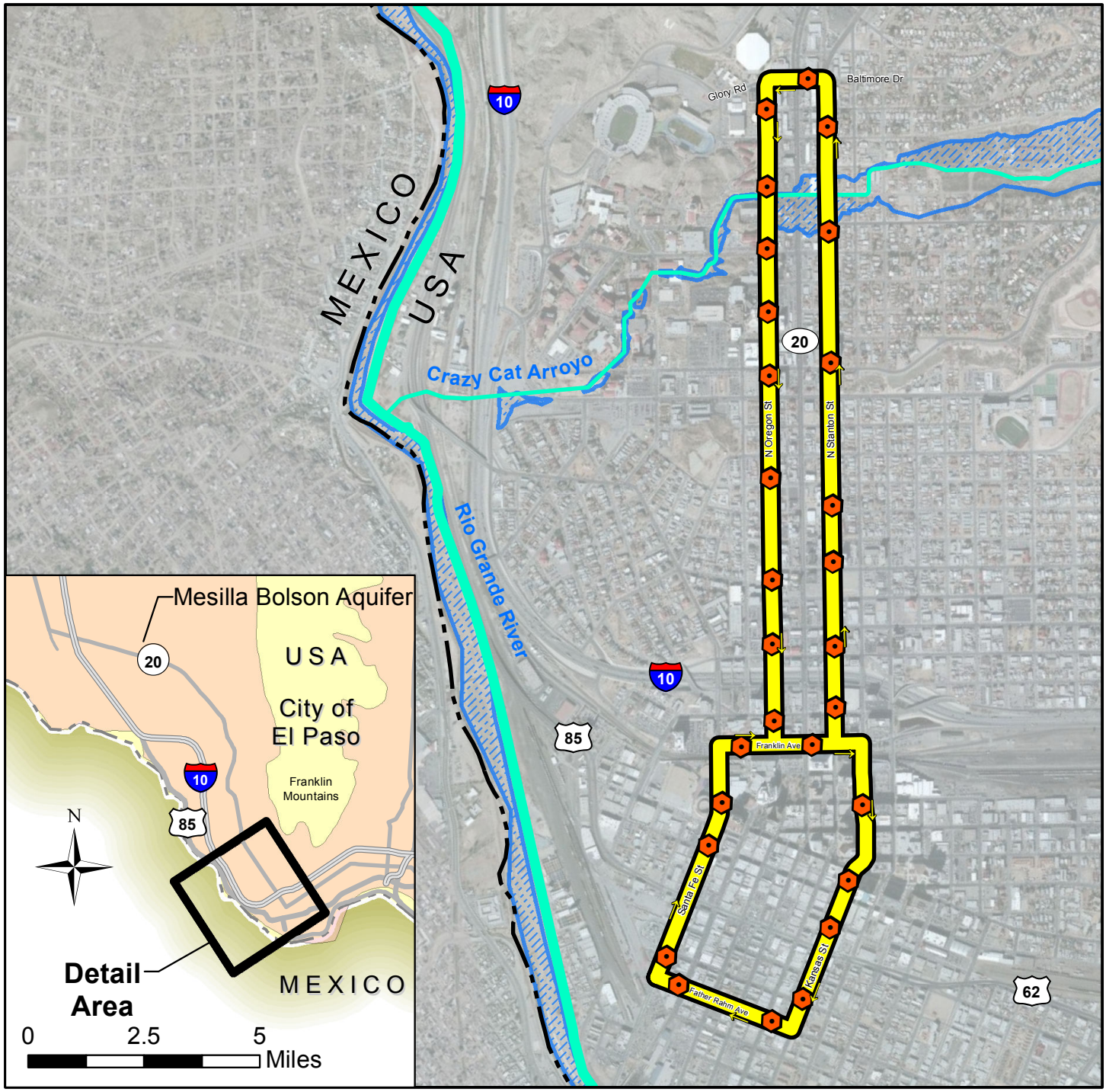

Legend

- Primary Route
- Proposed Stop
- 100-Year Floodplain
- Streamline
- Streetcar Direction
- International Boundary

El Paso Streetcar Location Map

N

0 750 1,500 3,000 4,500 Feet

THE CITY OF EL PASO TEXAS

6/7/2013

URS

Appendix B

Notice of Intent (NOI)

TCEQ Office Use Only
Permit No.:
RN:
CN:
Region:

RESET FORM

Notice of Intent (NOI) for Stormwater Discharges Associated with Construction Activity under TPDES General Permit (TXR150000)

IMPORTANT:

- Use the INSTRUCTIONS to fill out each question in this form.
- Use the CHECKLIST to make certain all you filled out all required information. Incomplete applications **WILL** delay approval or result in automatic denial.
- Once processed your permit can be viewed at: http://www2.tceq.texas.gov/wq_dpa/index.cfm

ePERMITS: Sign up now for online NOI: https://www3.tceq.texas.gov/steers/index.cfm
Pay a $225 reduced application fee by using ePermits.

APPLICATION FEE:

- You must pay the **$325** Application Fee to TCEQ for the paper application to be complete.
- Payment and NOI must be mailed to separate addresses.
- Did you know you can pay on line?
  - Go to https://www3.tceq.texas.gov/epay/index.cfm
  - Select Fee Type: GENERAL PERMIT CONSTRUCTION STORM WATER DISCHARGE NOI APPLICATION
- **Provide your payment information below, for verification of payment:**

☐ Mailed Check/Money Order No.: _____
Name Printed on Check: _____
☐ EPAY Voucher No.: _____
Is the Payment Voucher copy attached? ☐ Yes

RENEWAL: Is this NOI a Renewal of an existing General Permit Authorization? (Note: A permit cannot be renewed after June 3, 2013.)

☐ Yes The Permit number is: TXR15_____
(If a permit number is not provided, a new number will be assigned.)
☐ No

1) OPERATOR (Applicant)

a) If the applicant is currently a customer with TCEQ, what is the Customer Number (CN) issued to this entity? You may search for your CN at: http://www12.tceq.texas.gov/crpub/index.cfm?fuseaction=cust.CustSearch

CN_____

b) What is the Legal Name of the entity (applicant) applying for this permit?

_____

(The legal name must be spelled exactly as filed with the Texas Secretary of State, County, or in the legal document forming the entity.)

c) What is the name and title of the person signing the application? The person must be an executive official meeting signatory requirements in TAC 305.44(a).
Prefix (Mr. Ms. Miss): _____
First/Last Name: _____Suffix: _____
Title: _____Credential: _____

d) What is the Operator Contact's (Responsible Authority) contact information and mailing address as recognized by the US Postal Service (USPS)? You may verify the address at: http://zip4.usps.com/zip4/welcome.jsp
Phone #:_____ext:_____Fax #:_____
E-mail: _____
Mailing Address:_____
Internal Routing (Mail Code, Etc.):_____
City:_____State:_____ZIP Code:_____
If outside USA: Territory:_____Country Code:_____Postal Code:_____

e) Indicate the type of Customer (The instructions will help determine your customer type):

☐ Individual	☐ Limited Partnership	☐ Sole Proprietorship-DBA
☐ Joint Venture	☐ General Partnership	☐ Corporation
☐ Trust	☐ Estate	☐ Federal Government
☐ State Government	☐ County Government	☐ City Government
☐ Other Government		

f) Independent Operator? ☐ Yes ☐ No
(If governmental entity, subsidiary, or part of a larger corporation, check "No".)

g) Number of Employees:
☐ 0-20; ☐ 21-100; ☐ 101-250; ☐ 251-500; or ☐ 501 or higher

h) Customer Business Tax and Filing Numbers:
(REQUIRED for Corporations and Limited Partnerships. Not Required for Individuals, Government, or Sole Proprietors)
State Franchise Tax ID Number: _____
Federal Tax ID: _____
Texas Secretary of State Charter (filing) Number: _____
DUNS Number (if known): _____

2) APPLICATION CONTACT

If TCEQ needs additional information regarding this application, who should be contacted?

Is the application contact the same as the applicant identified above?

☐ Yes, go to Section 3). ☐ No, complete section below.

Prefix (Mr. Ms. Miss):_____
First/Last Name: _____Suffix: _____
Title: _____Credential: _____

Organization Name:_____
Phone No.:_____ ext:_____ Fax Number:_____
E-mail:_____
Mailing Address:_____
Internal Routing (Mail Code, Etc.):_____
City:_____State:_____ZIP Code:_____
Mailing Information if outside USA:
Territory:_____Country Code:_____Postal Code:_____

3) REGULATED ENTITY (RE) INFORMATION ON PROJECT OR SITE

If the site of your business is part of a larger business site or if other businesses were located at this site before yours, a Regulated Entity Number (RN) may already be assigned for the larger site. Use the RN assigned for the larger site. Search TCEQ's Central Registry to see if the larger site may already be registered as a regulated site at: http://www12.tceq.texas.gov/crpub/index.cfm?fuseaction=regent.RNSearch.

If the site is found, provide the assigned Regulated Entity Reference Number and provide the information for the site to be authorized through this application below. The site information for this authorization may vary from the larger site information.

a) TCEQ issued RE Reference Number (RN): RN_____

b) Name of project or site (the name known by the community where located):
_____

c) In your own words, briefly describe the primary business of the Regulated Entity: (Do not repeat the SIC and NAICS code):
_____

d) County (or counties if > 1) _____

e) Latitude:_____ Longitude: _____

f) Does the site have a physical address?
☐ Yes, complete Section A for a physical address.
☐ No, complete Section B for site location information.

Section A: Enter the physical address for the site.
Verify the address with USPS. If the address is not recognized as a delivery address, provide the address as identified for overnight mail delivery, 911 emergency or other online map tools to confirm an address.

Physical Address of Project or Site:
Street Number: _____ Street Name: _____
City: _____State: Texas ZIP Code: _____

Section B: Enter the site location information.

If no physical address (Street Number & Street Name), provide a written location access description to the site. (Ex.: located 2 miles west from intersection of Hwy 290 & IH35 accessible on Hwy 290 South)

City where the site is located or, if not in a city, what is the nearest city:

State: Texas ZIP Code where the site is located: _____

4) GENERAL CHARACTERISTICS

a) Is the project/site located on Indian Country Lands?

☐ Yes - If the answer is Yes, you must obtain authorization through EPA, Region 6.

☐ No

b) Is your construction activity associated with a facility that, when completed, would be associated with the exploration, development, or production of oil or gas or geothermal resources?

☐ Yes - If the answer is Yes, you may be under jurisdiction of the Railroad Commission of Texas and may need to obtain authorization through EPA, Region 6.

☐ No

c) What is the Primary Standard Industrial Classification (SIC) Code that best describes the construction activity being conducted at the site?

Primary SIC Code: _____

d) If applicable, what is the Secondary SIC Code(s): _____

e) What is the total number of acres disturbed? _____

f) Is the project site part of a larger common plan of development or sale?

☐ Yes - If the answer is Yes, the total number of acres disturbed can be less than 5 acres.

☐ No - If the answer is No, the total number of acres disturbed must be 5 or more. If the total number of acres disturbed is less than 5 then the project site does not qualify for coverage through this Notice of Intent. Coverage will be denied. See the requirements in the general permit for small construction sites.

g) What is the name of the first water body(s) to receive the stormwater runoff or potential runoff from the site?

_____

h) What is the segment number(s) of the classified water body(s) that the discharge will eventually reach?

_____

i) Is the discharge into an MS4?

☐ Yes - If the answer is Yes, provide the name of the MS4 operator below.

☐ No

If Yes, provide the name of the MS4 operator:

_____

Note: The general permit requires you to send a copy of the NOI to the MS4 operator.

j) Are any of the surface water bodies receiving discharges from the construction site on the latest EPA-approved CWA 303(d) List of impaired waters?

☐ Yes - If the answer is Yes, provide the name(s) of the impaired water body(s) below.

☐ No

If Yes, provide the name(s) of the impaired water body(s):

_____

k) Is the discharge or potential discharge within the Recharge Zone, Contributing Zone, or Contributing Zone within the Transition Zone of the Edwards Aquifer as defined in 30 TAC Chapter 213?

☐ Yes - If the answer is Yes, complete certification below by checking "Yes."

☐ No

I certify that a copy of the TCEQ approved Plan required by the Edwards Aquifer Rule (30 TAC Chapter 213) is either included or referenced in the Stormwater Pollution Prevention Plan.

☐ Yes

5) CERTIFICATION

Check Yes to the certifications below. Failure to indicate Yes to ***ALL*** items may result in denial of coverage under the general permit.

a) I certify that I have obtained a copy and understand the terms and conditions of the Construction General Permit (TXR150000). ☐ Yes

b) I certify that the full legal name of the entity applying for this permit has been provided and is legally authorized to do business in Texas. ☐ Yes

c) I understand that a Notice of Termination (NOT) must be submitted when this authorization is no longer needed. ☐ Yes

d) I certify that a Stormwater Pollution Prevention Plan has been developed, will be implemented prior to construction and to the best of my knowledge and belief is compliant with any applicable local sediment and erosion control plans, as required in the general permit TXR150000. Note: For multiple operators who prepare a shared SWP3, the confirmation of an operator may be limited to its obligations under the SWP3 provided all obligations are confirmed by at least one operator. ☐ Yes

Operator Certification:

I,_____ _____

Typed or printed name Title

certify under penalty of law that this document and all attachments were prepared under my direction or supervision in accordance with a system designed to assure that qualified personnel properly gather and evaluate the information submitted. Based on my inquiry of the person or persons who manage the system, or those persons directly responsible for gathering the information, the information submitted is, to the best of my knowledge and belief, true, accurate, and complete. I am aware there are significant penalties for submitting false information, including the possibility of fine and imprisonment for knowing violations.

I further certify that I am authorized under 30 Texas Administrative Code 305.44 to sign and submit this document, and can provide documentation in proof of such authorization upon request.

Signature: _____ Date:_____

(Use blue ink)

NOTICE OF INTENT CHECKLIST (TXR150000)

- Did you complete everything? Use this checklist to be sure!
- Are you ready to mail your form to TCEQ? Go to the General Information Section of the Instructions for mailing addresses.

This checklist is for use by the operator to ensure a complete application. Missing information may result in denial of coverage under the general permit. (See NOI process description in the Instructions)

Application Fee:

If paying by Check:

- ☐ Check was mailed **separately** to the TCEQs Cashier's Office. (See Instructions for Cashier's address and Application address.)
- ☐ Check number and name on check is provided in this application.

If using ePay:

- ☐ The voucher number is provided in this application or a copy of the voucher is attached.

PERMIT NUMBER:

- ☐ Permit number provided – if this application is for renewal of an existing authorization.

OPERATOR INFORMATION - Confirm each item is complete:

- ☐ Customer Number (CN) issued by TCEQ Central Registry
- ☐ Legal name as filed to do business in Texas (Call TX SOS 512/463-5555)
- ☐ Name and title of responsible authority signing the application
- ☐ Mailing address is complete & verifiable with USPS. www.usps.com
- ☐ Phone numbers/e-mail address
- ☐ Type of operator (entity type)
- ☐ Independent operator
- ☐ Number of employees
- ☐ For corporations or limited partnerships – Tax ID and SOS filing numbers
- ☐ Application contact and address is complete & verifiable with USPS. http://www.usps.com

REGULATED ENTITY (RE) INFORMATION ON PROJECT OR SITE - Confirm each item is complete:

- ☐ Regulated Entity Reference Number (RN) (if site is already regulated by TCEQ)
- ☐ Site/project name/regulated entity
- ☐ Latitude and longitude http://www.tceq.texas.gov/gis/sqmaview.html
- ☐ County
- ☐ Site/project physical address. Do not use a rural route or post office box.
- ☐ Business description

GENERAL CHARACTERISTICS - Confirm each item is complete:

- ☐ Indian Country Lands –the facility is not on Indian Country Lands
- ☐ Construction activity related to facility associated to oil, gas, or geothermal resources
- ☐ Standard Industrial Classification (SIC) Code www.osha.gov/oshstats/sicser.html
- ☐ Acres disturbed is provided and qualifies for coverage through a NOI
- ☐ Common plan of development or sale
- ☐ Receiving water body(s)
- ☐ Segment number(s)
- ☐ Impaired water body(s)
- ☐ MS4 operator
- ☐ Edwards Aquifer rule

CERTIFICATION

- ☐ Certification statements have been checked indicating "Yes"
- ☐ Signature meets 30 Texas Administrative Code (TAC) 305.44 and is original.

Notice of Intent (NOI) for Stormwater Discharges Associated with Construction Activity under TPDES General Permit (TXR150000)

General Information and Instructions

GENERAL INFORMATION

Where to Send the Notice of Intent (NOI):

BY REGULAR U.S. MAIL
Texas Commission on
Environmental Quality
Stormwater Processing Center
(MC228)
P.O. Box 13087
Austin, Texas 78711-3087

BY OVERNIGHT/EXPRESS MAIL
Texas Commission on
Environmental Quality
Stormwater Processing Center
(MC228)
12100 Park 35 Circle
Austin, TX 78753

TCEQ Contact List:

Application – status and form questions:	*512/239-3700, swpermit@tceq.texas.gov*
Technical questions:	*512/239-4671, swgp@tceq.texas.gov*
Environmental Law Division:	*512/239-0600*
Records Management - obtain copies of forms:	*512/239-0900*
Reports from databases (as available):	*512/239-DATA (3282)*
Cashier's office:	*512/239-0357 or 512/239-0187*

Notice of Intent Process:

When your NOI is received by the program, the form will be processed as follows:

1) **Administrative Review:** Each item on the form will be reviewed for a complete response. In addition, the operator's legal name must be verified with Texas Secretary of State as valid and active (if applicable). The address(s) on the form must be verified with the US Postal service as receiving regular mail delivery. Never give an overnight/express mailing address.

2) **Notice of Deficiency:** If an item is incomplete or not verifiable as indicated above, a notice of deficiency (NOD) will be mailed to the operator. The operator will have 30 days to respond to the NOD. The response will be reviewed for completeness.

3) **Acknowledgment of Coverage:** An Acknowledgment Certificate will be mailed to the operator. This certificate acknowledges coverage under the general permit.
   -or-
   Denial of Coverage: If the operator fails to respond to the NOD or the response is inadequate, coverage under the general permit may be denied. If coverage is denied, the operator will be notified.

General Permit (Your Permit)

For NOIs submitted **electronically** through ePermits, provisional coverage under the general permit begins immediately following confirmation of receipt of the NOI form by the TCEQ.

For **paper** NOIs, provisional coverage under the general permit begins **7 days after a completed NOI is postmarked for delivery** to the TCEQ.

You should have a copy of your general permit when submitting your application. You may view and print your permit for which you are seeking coverage, on the TCEQ web site http://www.tceq.texas.gov. Search using key word TXR150000.

General Permit Forms

The Notice of Intent (NOI), Notice of Termination (NOT), and Notice of Change (NOC) (including instructions) are available in Adobe Acrobat PDF format on the TCEQ web site http://www.tceq.texas.gov.

Change in Operator

An authorization under the general permit is not transferable. If the operator of the regulated entity changes, the present permittee must submit a Notice of Termination and the new operator must submit a Notice of Intent. The NOT and NOI must be submitted no later than 10 days prior to the change in Operator status.

TCEQ Central Registry Core Data Form

The Core Data Form has been incorporated into this form. Do not send a Core Data Form to TCEQ. After final acknowledgment of coverage under the general permit, the program will assign a Customer Number and Regulated Entity Number.

You can find the information on the Central Registry web site at http://www12.tceq.texas.gov/crpub/index.cfm. You can search by the Regulated Entity (RN), Customer Number (CN) or Name (Permittee), or by your permit number under the search field labeled "Additional ID". Capitalize all letters in the permit number.

The Customer (Permittee) is responsible for providing consistent information to the TCEQ, and for updating all CN and RN data for all authorizations as changes occur. For General Permits, a Notice of Change form must be submitted to the program area.

Fees associated with a General Permit

Payment of the fee may be made by check or money order, payable to TCEQ, or through EPAY (electronic payment through the web).

Application Fee: This fee is required to be paid at the time the NOI is submitted. Failure to submit payment at the time the application is filed will cause delays in acknowledgment or denial of coverage under the general permit.

Mailed Payments:

Payment must be mailed under separate cover at one of the addresses below using the attached Application Fee submittal form. (DO NOT SEND A COPY OF THE NOI WITH THE APPLICATION FEE SUBMITTAL FORM)

BY REGULAR U.S. MAIL
Texas Commission on Environmental Quality
Financial Administration Division
Cashier's Office, MC-214
P.O. Box 13088
Austin, TX 78711-3088

BY OVERNIGHT/EXPRESS MAIL
Texas Commission on Environmental Quality
Financial Administration Division
Cashier's Office, MC-214
12100 Park 35 Circle
Austin, TX 78753

ePAY Electronic Payment: http://www.tceq.texas.gov/epay

When making the payment you must select Water Quality, and then select the fee category "General Permit Construction Storm Water Discharge NOI Application". You must include a copy of the payment voucher with your NOI. Your NOI will not be considered complete without the payment voucher.

INSTRUCTIONS FOR FILLING OUT THE NOI FORM

Renewal of General Permit. Dischargers holding active authorizations under the expired General Permit are required to submit a NOI to continue coverage. The existing permit number is required. If the permit number is not provided or has been terminated, expired, or denied a new permit number will be issued.

1. Operator (Applicant)

a) Enter assigned Customer Number (CN)
TCEQ's Central Registry will assign each customer a number that begins with CN, followed by nine digits. **This is not a permit number, registration number, or license number**.
If this customer has not been assigned a CN, leave the space for the CN blank.
If this customer has already been assigned this number, enter the permittee's CN.

b) Legal Name
Provide the current legal name of the permittee, as authorized to do business in Texas. The name must be provided exactly as filed with the Texas Secretary of State (SOS), or on other legal documents forming the entity, that is filed in the county where doing business. You may contact the SOS at 512/463-5555, for more information related to filing in Texas. If filed in the county where doing business, provide a copy of the legal documents showing the legal name.

c) Person Signing Application
Provide information about person signing section 5) Certification.

d) Operator Contact's (Responsible Authority) Contact Information and Mailing Address
Provide a complete mailing address for receiving mail from the TCEQ. The address must be verifiable with the US Postal Service at http://www.usps.com for regular mail delivery (not overnight express mail). If you find that the address is not verifiable using the USPS web search, please indicate the address is used by the USPS for regular mail delivery.

The area code and phone number should provide contact to the operator. Leave Extension blank if not applicable.

The fax number and e-mail address are optional and should correspond to the operator.

e) Type of Customer (Entity Type)
Check only one box that identifies the type of entity. Use the descriptions below to identify the appropriate entity type. Note that the selected entity type also indicates the name that must be provided as an applicant for a permit, registration or authorization.

Sole Proprietorship – DBA

A sole proprietorship is a customer that is owned by only one person and has not been incorporated. This business may:

- be under the person's name
- have its own name (doing business as or d.b.a.)
- have any number of employees

If the customer is a Sole Proprietorship or DBA, the 'legal name' of the individual business 'owner' must be provided. The DBA name is not recognized as the 'legal name' of the entity. The DBA name may be used for the site name (regulated entity).

Individual

An individual is a customer who has not established a business, but conducts an activity that needs to be regulated by the TCEQ.

Partnership

- A customer that is established as a partnership as defined by the Texas Secretary of State Office (TX SOS). A Limited Partnership or Limited Liability Partnership (Partnership) is required to file with the Texas Secretary of State. A General Partnership or Joint Venture is not required to register with the state.
- **Partnership (Limited Partnership or Limited Liability Partnership):** A limited partnership is defined in the Act as a partnership formed by two or more persons under the provisions of Section 3 of the Uniform Limited Partnership Act (Art. 6132a, Revised Civil Statutes of Texas) and having as members one or more general partners and one or more limited partners. The limited partners as such are not bound by the obligations of the partnership. Limited partners may not take part in the day-to-day operations of the business. A Limited Partnership must file with the Texas Secretary of State. A registered limited liability partnership is a general or limited partnership that is registered with the Texas Secretary of State. The partnership's name must contain the words "Registered Limited Liability Partnership" or the abbreviation "L.L.P." as the last words or letters of its name.
- **General Partnership:** A general partner may or may not invest, participates in running the partnership and is liable for all acts and debts of the partnership and any member of it. A General Partnership does not have limited partners. For a General Partnership, there is no registration with the state or even written agreement necessary for a general partnership to be formed. The legal definition of a partnership is generally stated as "an association of two or more persons to carry on as co-owners a business for profit" (Revised Uniform Partnership Act § 101 [1994]).
- **Joint Venture:** A joint venture is but another name for a special partnership. It might be distinguished from a general partnership in that the latter is formed for the transaction of a general business, while a joint venture is usually limited to a single transaction. That is, a joint venture is a special combination of persons in the nature of a partnership engaged in the joint prosecution of a particular transaction for mutual benefit or profit.

Corporation

A customer meets all of these conditions:

- is a legally incorporated entity under the laws of any state or country
- is recognized as a corporation by the Texas Secretary of State

- has proper operating authority to operate in Texas.
- The corporation's 'legal name' as filed with the Texas Secretary of State must be provided as applicant. An 'assumed' name of a corporation is not recognized as the 'legal name' of the entity.

Government

Federal, state, county, or city government (as appropriate)
The customer is either an agency of one of these levels of government or the governmental body itself. The government agency's 'legal name' must be provided as the applicant. A department name or other description of the organization should not be included as a part of the 'legal name' as applicant.

Trust or Estate

A trust and an estate are fiduciary relationships governing the trustee/executor with respect to the trust/estate property.

Other Government

A utility district, water district, tribal government, college district, council of governments, or river authority. Write in the specific type of government.

f) Independent Entity

Check No if this customer is a subsidiary, part of a larger company, or is a governmental entity. Otherwise, check Yes.

g) Number of Employees

Check one box to show the number of employees for this customer's entire company, at all locations. This is not necessarily the number of employees at the site named in the application.

h) Customer Business Tax and Filing Numbers

These are required for Corporations and Limited Partnerships. These are not required for Individuals, Government, and Sole Proprietors.

State Franchise Tax ID Number

Corporations and limited liability companies that operate in Texas are issued a franchise tax identification number. If this customer is a corporation or limited liability company, enter this number here.

Federal Tax ID

All businesses, except for some small sole proprietors, individuals, or general partnerships should have a federal taxpayer identification number (TIN). Enter this number here. Use no prefixes, dashes, or hyphens. Sole proprietors, individuals, or general partnerships do not need to provide a federal tax ID.

TX SOS Charter (filing) Number

Corporations and Limited Partnerships required to register with the Texas Secretary of State are issued a charter or filing number. You may obtain further information by calling SOS at 512/463-5555.

DUNS Number

Most businesses have a DUNS (Data Universal Numbering System) number issued by Dun and Bradstreet Corp. If this customer has one, enter it here.

2. APPLICATION CONTACT

Provide the name, title and communication information of the person that TCEQ can contact for additional information regarding this application.

3. REGULATED ENTITY (RE) INFORMATION ON PROJECT OR SITE

a) Regulated Entity Reference Number (RN)

A number issued by TCEQ's Central Registry to sites (a location where a regulated activity occurs) regulated by TCEQ. This is not a permit number, registration number, or license number. If this regulated entity has not been assigned an RN, leave this space blank.

If the site of your business is part of a larger business site, a Regulated Entity Number (RN) may already be assigned for the larger site. Use the RN assigned for the larger site. Search TCEQ's Central Registry to see if the larger site may already be registered as a regulated site at: http://www12.tceq.texas.gov/crpub/index.cfm?fuseaction=regent.RNSearch

If the site is found, provide the assigned Regulated Entity Reference Number (RN) and provide the information for the site to be authorized through this application. The site information for this authorization may vary from the larger site information.

An example is a chemical plant where a unit is owned or operated by a separate corporation that is accessible by the same physical address of your unit or facility. Other examples include industrial parks identified by one common address but different corporations have control of defined areas within the site. In both cases, an RN would be assigned for the physical address location and the permitted sites would be identified separately under the same RN.

b) Site/Project Name/Regulated Entity

Provide the name of the site as known by the public in the area where the site is located. The name you provide on this application will be used in the TCEQ Central Registry as the Regulated Entity name.

c) Description of Activity Regulated

In your own words, briefly describe the primary business that you are doing that requires this authorization. Do not repeat the SIC Code description.

d) County

Identify the county or counties in which the regulated entity is located.

e) Latitude and Longitude

Enter the latitude and longitude of the site in degrees, minutes, and seconds or decimal form. For help obtaining the latitude and longitude, go to:
http://www.tceq.texas.gov/gis/sqmaview.html or http://nationalmap.gov/ustopo

f) Site/Project (RE) Physical Address/Location Information

Enter the complete address for the site in Section A if the address can be validated through the US Postal Service. If the physical address is not recognized as a USPS delivery address, you may need to validate the address with your local police (911 service) or through an online map site used to locate a site. Please confirm this to be a complete and valid address. Do not use a rural route or post office box for a site location.

If a site does not have an address that includes a street (or house) number and street name, enter NO ADDRESS for the street name in Section A. In Section B provide a complete written location description. For example: "The site is located 2 miles west from intersection of Hwy 290 & IH35, located on the southwest corner of the Hwy 290 South bound lane."
Provide the city (or nearest city) and zip code of the facility location.

4. GENERAL CHARACTERISTICS

a) Indian Country Lands

If your site is located on Indian Country Lands, the TCEQ does not have authority to process your application. You must obtain authorization through EPA, Region 6, Dallas. Do not submit this form to TCEQ.

b) Construction activity associated with facility associated with exploration, development, or production of oil, gas, or geothermal resources

If your activity is associated with oil and gas exploration, development, or production, you may be under jurisdiction of the Railroad Commission of Texas and may need to obtain authorization from EPA Region 6. For more information, see:
http://info.sos.state.tx.us/pls/pub/readtac$ext.TacPage?sl=R&app=9&p_dir=&p_rloc=&p_tloc=&p_ploc=&pg=1&p_tac=&ti=16&pt=1&ch=3&rl=30

Construction activities associated with a facility related to oil, gas or geothermal resources may include the construction of a well site; treatment or storage facility; underground hydrocarbon or natural gas storage facility; reclamation plant; gas processing facility; compressor station; terminal facility where crude oil is stored prior to refining and at which refined products are stored solely for use at the facility; a carbon dioxide geologic storage facility; and a gathering, transmission, or distribution pipeline that will transport crude oil or natural gas, including natural gas liquids, prior to refining of such oil or the use of the natural gas in any manufacturing process or as a residential or industrial fuel.

Where required by federal law, discharges of stormwater associated with construction activities under the Railroad Commission's jurisdiction must be authorized by the EPA and the Railroad Commission of Texas, as applicable. Activities under Railroad Commission of Texas jurisdiction include construction of a facility that, when completed, would be associated with the exploration, development, or production of oil or gas or geothermal resources, such as a well site; treatment or storage facility; underground hydrocarbon or natural gas storage facility; reclamation plant; gas processing facility; compressor station; terminal facility where crude oil is stored prior to refining and at which refined products are stored solely for use at the facility; a carbon dioxide geologic storage facility under the jurisdiction of the Railroad Commission of Texas; and a gathering, transmission, or distribution pipeline that will transport crude oil or natural gas, including natural gas liquids, prior to refining of such oil or the use of the natural gas in any manufacturing process or as a residential or industrial fuel. The Railroad Commission of Texas also has jurisdiction over stormwater from land disturbance associated with a site survey that is conducted prior to construction of a facility that would be regulated by the Railroad Commission of Texas. Under 33 U.S.C. §1342(l)(2) and §1362(24), EPA cannot require a permit for discharges of stormwater from "field activities or operations associated with {oil and gas} exploration, production, processing, or treatment operations, or transmission facilities, including activities necessary to prepare a site for drilling and for the movement and placement of drilling equipment, whether or not such field activities or operations may be considered to be construction activities" unless the discharge is contaminated by contact with any overburden, raw material, intermediate product, finished product, byproduct, or waste product located on the site of the facility. Under §3.8 of this title (relating to Water Protection), the Railroad

Commission of Texas prohibits operators from causing or allowing pollution of surface or subsurface water. Operators are encouraged to implement and maintain best management practices (BMPs) to minimize discharges of pollutants, including sediment, in stormwater during construction activities to help ensure protection of surface water quality during storm events.

c) Primary Standard Industrial Classification (SIC) Code
Provide the SIC Code that best describes the construction activity being conducted at this site.

Common SIC Codes related to construction activities include:

- 1521 - Construction of Single Family Homes
- 1522 - Construction of Residential Bldgs. Other than Single Family Homes
- 1541 - Construction of Industrial Bldgs. and Warehouses
- 1542 - Construction of Non-residential Bldgs, other than Industrial Bldgs. and Warehouses
- 1611 - Highway and Street Construction, except Highway Construction
- 1622 - Bridge, Tunnel, and Elevated Highway Construction
- 1623 - Water, Sewer, Pipeline and Communications, and Power Line Construction

For help with SIC Codes, go to:
http://www.osha.gov/pls/imis/sicsearch.html

d) Secondary SIC Code
Secondary SIC Code(s) may be provided. Leave blank if not applicable. For help with SIC Codes, go to:
http://www.osha.gov/pls/imis/sicsearch.html

e) Total Number of Acres Disturbed
Provide the approximate number of acres that the construction site will disturb. Construction activities that disturb less than one acre, unless they are part of a larger common plan that disturbs more than one acre, do not require permit coverage. Construction activities that disturb between one and five acres, unless they are part of a common plan that disturbs more than five acres, do not require submission of an NOI. Therefore, the estimated area of land disturbed should not be less than five, unless the project is part of a larger common plan that disturbs five or more acres. Disturbed means any clearing, grading, excavating, or other similar activities.

If you have any questions about this item, please contact the stormwater technical staff by phone at (512)239-4671 or by email at swgp@tceq.texas.gov.

f) Common Plan of Development
Construction activities that disturb less than five acres do not require submission of an NOI unless they are part of a common plan of development or for sale where the area disturbed is five or more acres. Therefore, the estimated area of land disturbed should not be less than five, unless the project is part of a larger common plan that disturbs five or more acres. Disturbed means any clearing, grading, excavating, or other similar activities.

For more information on "What is a common plan of development?" go to:
www.tceq.texas.gov/permitting/stormwater/common_plan_of_development_steps.html

For further information, go to the TCEQ stormwater construction webpage at:
www.tceq.texas.gov/goto/construction and search for "Additional Guidance and Quick Links". If

you have any further questions about this item, please call the stormwater technical staff at (512)239-4671.

g) Identify the water body(s) receiving stormwater runoff
The stormwater may be discharged directly to a receiving stream or through a MS4 from your site. It eventually reaches a receiving water body such as a local stream or lake, possibly via a drainage ditch. You must provide the name of the water body that receives the discharge from the site (a local stream or lake).

If your site has more than one outfall you need to include the name of the first water body for each outfall, if they are different.

h) Identify the segment number(s) of the classified water body(s)
Identify the classified segment number(s) receiving a discharge directly or indirectly. Go to the following link to find the segment number of the classified water body where stormwater will flow from the site: www.tceq.texas.gov/waterquality/monitoring/viewer.html

You may also find the segment number in TCEQ publication GI-316:
www.tceq.texas.gov/publications/gi/gi-316

If the discharge is into an unclassified receiving water and then crosses state lines prior to entering a classified segment, select the appropriate watershed:

- 0100 (Canadian River Basin)
- 0200 (Red River Basin)
- 0300 (Sulfur River Basin)
- 0400 (Cypress Creek Basin)
- 0500 (Sabine River Basin)

Call the Water Quality Assessments section at (512)239-4671 for further assistance.

i) Discharge into MS4 – Identify the MS4 Operator
The discharge may initially be into a municipal separate storm sewer system (MS4). If the stormwater discharge is into an MS4, provide the name of the entity that operates the MS4 where the stormwater discharges. An MS4 operator is often a city, town, county, or utility district, but possibly can be another form of government. Please note that the Construction General Permit requires the Operator to supply the MS4 with a copy of the NOI submitted to TCEQ. For assistance, you may call the technical staff at (512)239-4671.

j) Surface Water bodies on list of impaired waters – Identify the impaired water body(s)
Indicate Yes or No if any surface water bodies receiving discharges from the construction site are on the latest EPA-approved CWA 303(d) List of impaired waters. Provide the name(s) of surface water bodies receiving discharges or potential discharges from the construction site that are on the latest EPA-approved CWA 303(d) List of impaired waters. The EPA-approved CWA 303(d) List of impaired waters in Texas can be found at:
www.tceq.texas.gov/waterquality/assessment/305_303.html

NOTE: Do not use any "draft" documents.

k) Discharges to the Edwards Aquifer Recharge Zone and Certification
See maps on the TCEQ website to determine if the site is located within the Recharge Zone, Contributing Zone, or Contributing Zone within the Transition Zone of the Edwards Aquifer at: www.tceq.texas.gov/field/eapp/viewer.html

If the discharge or potential discharge is within the Recharge Zone, Contributing Zone, or Contributing Zone within the Transition Zone of the Edwards Aquifer, a site specific authorization approved by the Executive Director under the Edwards Aquifer Protection Program (30 TAC Chapter 213) is required before construction can begin. The certification must be answered "Yes" for coverage under the Construction General Permit. The TCEQ approved plan must be readily available for TCEQ staff to review at the time that the NOI is submitted.

The general permit requires the approved Contributing Zone Plan or Water Pollution Abatement Plan to be included or referenced as a part of the Stormwater Pollution Prevention Plan.

For questions regarding the Edwards Aquifer Protection Program, contact the appropriate TCEQ Regional Office. For projects in Hays, Travis and Williamson Counties: Austin Regional Office, 12100 Park 35 Circle, Austin, TX 78753, 512-339-2929. For Projects in Bexar, Comal, Kinney, Medina and Uvalde Counties: TCEQ San Antonio Regional Office, 14250 Judson Rd., San Antonio, TX 78233-4480, 210-490-3096.

5. CERTIFICATIONS

Failure to indicate **Yes** to ALL of the certification items may result in denial of coverage under the general permit.

a) Certification of Understanding the Terms and Conditions of Construction General Permit (TXR150000)
Provisional coverage under the Construction General Permit (TXR150000) begins 7 days after the completed paper NOI is postmarked for delivery to the TCEQ. (Electronic applications submitted through ePermits have immediate provisional coverage). You must obtain a copy and read the Construction General Permit before submitting your application. You may view and print the Construction General Permit for which you are seeking coverage at the TCEQ web site: www.tceq.texas.gov/goto/construction

b) Certification of Legal Name
The full legal name of the applicant as authorized to do business in Texas is required. The name must be provided exactly as filed with the Texas Secretary of State (SOS), or on other legal documents forming the entity, that is filed in the county where doing business. You may contact the SOS at (512)463 5555, for more information related to filing in Texas.

c) Understanding of Notice of Termination
A permittee shall terminate coverage under this Construction General Permit through the submittal of a NOT when the operator of the facility changes, final stabilization has been reached, the discharge becomes authorized under an individual permit, or the construction activity never began at this site.

d) Certification of Stormwater Pollution Prevention Plan
The SWP3 identifies the areas and activities that could produce contaminated runoff at your site and then tells how you will ensure that this contamination is mitigated. For example, in describing your mitigation measures, your site's plan might identify the devices that collect and

filter stormwater, tell how those devices are to be maintained, and tell how frequently that maintenance is to be carried out. You must develop this plan in accordance with the TCEQ general permit requirements. This plan must be developed and implemented before you complete this NOI. The SWP3 must be available for a TCEQ investigator to review on request.

Operator Certification:

The certification must bear an original signature of a person meeting the signatory requirements specified under 30 Texas Administrative Code (TAC) §305.44.

IF YOU ARE A CORPORATION:

The regulation that controls who may sign an NOI or similar form is 30 Texas Administrative Code §305.44(a)(1) (see below). According to this code provision, any corporate representative may sign an NOI or similar form so long as the authority to sign such a document has been delegated to that person in accordance with corporate procedures. By signing the NOI or similar form, you are certifying that such authority has been delegated to you. The TCEQ may request documentation evidencing such authority.

IF YOU ARE A MUNICIPALITY OR OTHER GOVERNMENT ENTITY:

The regulation that controls who may sign an NOI or similar form is 30 Texas Administrative Code §305.44(a)(3) (see below). According to this code provision, only a ranking elected official or principal executive officer may sign an NOI or similar form. Persons such as the City Mayor or County Commissioner will be considered ranking elected officials. In order to identify the principal executive officer of your government entity, it may be beneficial to consult your city charter, county or city ordinances, or the Texas statute(s) under which your government entity was formed. An NOI or similar document that is signed by a government official who is not a ranking elected official or principal executive officer does not conform to §305.44(a)(3). The signatory requirement may not be delegated to a government representative other than those identified in the regulation. By signing the NOI or similar form, you are certifying that you are either a ranking elected official or principal executive officer as required by the administrative code. Documentation demonstrating your position as a ranking elected official or principal executive officer may be requested by the TCEQ.

If you have any questions or need additional information concerning the signatory requirements discussed above, please contact the Texas Commission on Environmental Quality's Environmental Law Division at (512)239-0600.

30 Texas Administrative Code

§305.44. Signatories to Applications

(a) All applications shall be signed as follows.

(1) For a corporation, the application shall be signed by a responsible corporate officer. For purposes of this paragraph, a responsible corporate officer means a president, secretary, treasurer, or vice-president of the corporation in charge of a principal business function, or any other person who performs similar policy or decision-making functions for the corporation; or the manager of one or more manufacturing, production, or operating facilities employing more than 250 persons or having gross annual sales or expenditures exceeding $25 million (in second-quarter 1980 dollars), if authority to sign documents has been assigned or delegated to the manager in accordance with corporate procedures. Corporate procedures governing authority to sign permit or post-closure order applications may provide for assignment or delegation to applicable corporate positions rather than to specific individuals.

(2) For a partnership or sole proprietorship, the application shall be signed by a general partner or the proprietor, respectively.

(3) For a municipality, state, federal, or other public agency, the application shall be signed by either a principal executive officer or a ranking elected official. For purposes of this paragraph, a principal executive officer of a federal agency includes the chief executive officer of the agency, or a senior executive officer having responsibility for the overall operations of a principal geographic unit of the agency (e.g., regional administrator of the EPA).

Texas Commission on Environmental Quality
General Permit Payment Submittal Form

Use this form to submit your Application Fee only if you are mailing your payment.

- Complete items 1 through 5 below:
- Staple your check in the space provided at the bottom of this document.
- Do not mail this form with your NOI form.
- Do not mail this form to the same address as your NOI.

Mail this form and your check to:

BY REGULAR U.S. MAIL

Texas Commission on Environmental Quality
Financial Administration Division
Cashier's Office, MC-214
P.O. Box 13088
Austin, TX 78711-3088

BY OVERNIGHT/EXPRESS MAIL

Texas Commission on Environmental Quality
Financial Administration Division
Cashier's Office, MC-214
12100 Park 35 Circle
Austin, TX 78753

Fee Code: GPA	General Permit: TXR150000

1. Check / Money Order No: _____
2. Amount of Check/Money Order: _____
3. Date of Check or Money Order: _____
4. Name on Check or Money Order: _____
5. NOI INFORMATION

   If the check is for more than one NOI, list each Project/Site (RE) Name and Physical Address exactly as provided on the NOI. DO NOT SUBMIT A COPY OF THE NOI WITH THIS FORM AS IT COULD CAUSE DUPLICATE PERMIT ENTRIES.

   See Attached List of Sites (If more space is needed, you may attach a list.)

   Project/Site (RE) Name: _____

   Project/Site (RE) Physical Address:

   _____

Staple Check in This Space

Appendix C

Large Construction Site Notice

LARGE CONSTRUCTION SITE NOTICE

FOR THE
Texas Commission on Environmental Quality (TCEQ)
Stormwater Program

TPDES GENERAL PERMIT TXR150000

"PRIMARY OPERATOR" NOTICE

This notice applies to construction sites operating under Part II.E.3. of the TPDES General Permit Number TXR150000 for discharges of stormwater runoff from construction sites equal to or greater than five acres, including the larger common plan of development. The information on this notice is required in Part III.D.2. of the general permit. Additional information regarding the TCEQ stormwater permit program may be found on the internet at:

http://www.tceq.state.tx.us/nav/permits/wq_construction.html

Site-Specific TPDES Authorization Number:	
Operator Name:	
Contact Name and Phone Number:	
Project Description: *Physical address or description of the site's location, and estimated start date and projected end date, or date that disturbed soils will be stabilized.*	
Location of Stormwater Pollution Prevention Plan:	

Appendix D

Subcontractor Certifications/Agreements

SUBCONTRACTOR CERTIFICATION
STORMWATER POLLUTION PREVENTION PLAN

Project Number: _____

Project Title: _____

Operator(s): _____

As a subcontractor, you are required to comply with the Storm Water Pollution Prevention Plan (SWPPP) for any work that you perform on site. Any person or group who violates any condition of the SWPPP may be subject to substantial penalties or loss of contract. You are encouraged to advise each of your employees working on this project of the requirements of the SWPPP. A copy of the SWPPP is available for your review at the office trailer.

Each subcontractor engaged in activities at the construction site that could impact stormwater must be identified and sign the following certification statement:

I certify under the penalty of law that I have read and understand the terms and conditions of the SWPPP for the above designated project and agree to follow the BMPs and practices described in the SWPPP.

This certification is hereby signed in reference to the above named project:

Company: _____

Address: _____

Telephone Number: _____

Type of construction service to be provided: _____

_____

_____

Signature: _____

Title: _____

Date: _____

Appendix E

BMP Factsheets

2.7 Soil Surface Treatments

Erosion Control

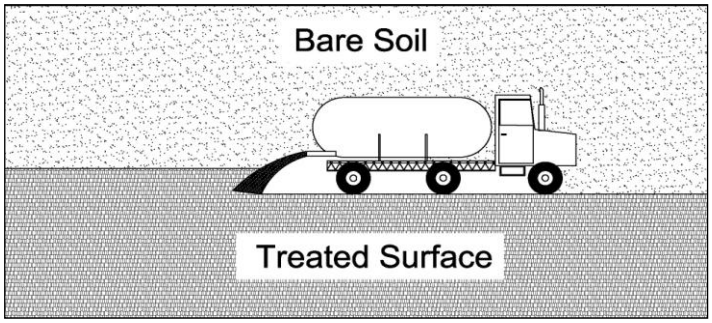

Description: Soil surface treatments are measures applied to a bare soil surface to temporarily decrease the amount of soil lost to wind and water erosion. Substances typically applied to the soil surface are water and organic and inorganic palliatives. Soil surface treatments are also effective for the surfaces of temporary berms and stockpiles.

KEY CONSIDERATIONS

DESIGN CRITERIA:

- Maintain the original ground cover as long as practical
- Select treatment method based on soil type, site conditions, and required duration of effectiveness
- Control traffic on areas being treated
- Apply water before start of work and repeat reguarly
- Select, dilute and apply palliatives according to manufacturer's recommendations

ADVANTAGES / BENEFITS:

- Prevents onsite and off-site impacts of dust deposition on roadways, drainage ways, or surface waters

DISADVANTAGES / LIMITATIONS:

- Sediment controls are still needed with soil surface treatments
- Effectiveness is temporary
- Control methods often require repeated applications
- Water has limited effectiveness on soils in wind erodibility groups 1 – 4 and 4L

MAINTENANCE REQUIREMENTS:

- Inspect regularly
- Reapply water and palliatives as needed

TARGETED POLLUTANTS

- ◒ Sediment
- ○ Nutrients & Toxic Materials
- ○ Oil & Grease
- ○ Floatable Materials
- ○ Other Construction Wastes

APPLICATIONS

Perimeter Control

Slope Protection

Sediment Barrier

Channel Protection

Temporary Stabilization

Final Stabilization

Waste Management

Housekeeping Practices

Fe=0.10-0.90

(Depends on type of treatment)

IMPLEMENTATION CONSIDERATIONS

- ◒ Capital Costs
- ◒ Maintenance
- ◒ Training
- ◒ Suitability for Slopes > 5%

Other Considerations:

- *Worker protection for mixing, dilution, and application of some palliatives*

2.7.1 Primary Use

Surface treatments are used to reduce wind and water erosion by providing temporary stabilization of bare soil. They are primarily used where stabilization is needed for less than 12 months.

2.7.2 Applications

Soil surface treatments are applicable to any construction site where dust is created and there is the potential for air and water pollution from dust being blown off the site. The treatments are applicable to bare areas of soil, temporary soil berms, stockpiles, earth-moving activities, and demolition activities, all of which can be sources of dust.

The National Resources Conservation Service (NRCS) assigns a wind erodibility group to soils as shown in Table 2.3.

Table 2.3 NRCS Wind Erodibility Groups

Group	Soil Type	Erosion Potential
1	Sands, coarse sands, fine sands and very fine sands	Extremely erodible
2	Loamy sands, loamy fine sands, and loamy very fine sands	Very highly erodible
3	Sandy loams, coarse sandy loams, fine sandy loams, and very fine sandy loams	Highly erodible
4L	Calcareous loamy soils that are less than 35 percent clay and more than 5 percent finely divided calcium carbonate	Erodible
4	Clay, silty clays, clay loams and silty clay loams that are more than 35 percent clay	Moderately erodible
5	Loam soils that are less than 18 percent clay and less than 5 percent finely divided calcium carbonate and sandy clay loams and sandy clays that are less than 5 percent finely divided calcium carbonate	Slightly erodible
6	Loamy soils that are 18 to 35 percent clay and less than 5 percent finely divided calcium carbonate, except silty clay loams	Very slightly erodible
7	Siltly clay loams that are less than 35 percent clay and less than 5 percent finely divided calcium carbonate	Slightly erodible
8	Stony or gravelly soils	Not subject to wind erosion

Soil surface treatments for dust control will be most applicable to soils in groups 1 through 4 and 4L. If the soil type is unknown, the native soil type(s) at a site can be identified on the NRCS Web Soil Survey at: http://websoilsurvey.nrcs.gov/app/. The website also provides the wind erodibility group for native soils.

Consider the depth of grading activities when determining the applicable surface treatments. Soil type varies with depth. The surface soil may have low potential for wind erosion, but the soil at a lower depth may be highly erodible when it is exposed by grading operations.

2.7.3 Design Criteria

General

- The first design criterion for soil surface treatments is to minimize the area of disturbed soil that requires treatment.

- Limit clearing and grading to the areas of the site required for the immediate phase of construction. For larger sites, plan the work to be phased such that the total disturbed area is less than 10 acres at all times. If possible, design the site layout and grading to allow for street and utility construction without having to grade the entire site to balance cut and fill.
- Selection of the surface treatment should consider the length of time for which stabilization is needed.
- Natural (e.g. trees) windbreaks or artificial wind screens can be designed into the site to decrease wind erosion potential. Wind screens should be 3 to 5 feet in height. Porosity of the wind screens should be a minimum of 20 percent. Optimum performance is in the 40 percent to 60 percent porosity range.
- Wind screens should never be impermeable. The purpose of the screen is to disrupt the wind, not block it.
- Wind screens placed around stockpiles shall enclose three sides of the stockpile.

Water Treatments

- Water treatment shall be used only for decreasing wind erosion. It provides no protection from erosion due to stormwater runoff.
- Water treatment is appropriate for areas that are worked daily or at least as frequently as every week or two. Areas where construction activities will not occur for more than 14 days shall receive another type of surface treatment, such as a palliative, vegetation, or other treatment that provides temporary stabilization and protection from water erosion.
- Water shall be applied 15 to 20 minutes before start of work and re-applied throughout the day as necessary to prevent visible emissions.
- At a minimum, sprinkle bare areas with an amount of water and at a rate that will moisten the top two inches of soil without creating runoff.
- When grading activities are occurring during prolonged dry and windy periods, sufficient water should be applied to moisten soil to the depth of cut or equipment penetration. This may require installing portable piping and sprinklers in advance of grading.
- If construction activities include installing an irrigation system, install it in early phases of construction, where feasible, to use for dust control.
- Water treatments provide limited stabilization against wind erosion and no stabilization against water erosion. Sediment controls are required with water treatments.

Palliative Treatments

- Palliatives consist of liquids that react with soil particles and bonds them into a cohesive crust that provides temporary resistance to wind and water erosion. Palliative treatments are also called soil binders.
- The major groups of palliatives used for erosion control are polyacrylamide (PAM), guar-based (organic) compounds, and polyvinyl acetates (inorganic polymers). Numerous variations and mixes of these palliatives are available, each with its unique properties.
- Palliative treatments are appropriate for areas that require temporary stabilization for 3 to 12 months. Palliative treatments are highly effective in controlling wind erosion and moderately effective in controlling water erosion. Perimeter controls for sediment should remain in place until final stabilization.
- In general, areas stabilized with palliatives must be protected from traffic to be effective. Palliative treatments that can withstand traffic (pedestrian or vehicle) are available; however, they are more expensive. The designer should determine whether the site can be controlled to prevent traffic on the stabilized areas. This analysis should consider non-construction related traffic. Often, the public driving ATV's and bicycles on the site when construction is not active is the cause of stabilization

failure. In many cases, temporary chain-link fencing is less expensive than a palliative that can withstand traffic or re-applying a palliative to areas that have been disturbed.

- Selection of the palliative mix, dilution rate, and application rate should be based on the soil type, site conditions, climate, anticipated traffic on the treated area, and required duration of the stabilization.
- The designer should work with the supplier to develop a mix specific for the soil, climate, and site conditions. A successful application is highly dependent on the right proportions in the mix. An "off the shelf" mix should not be used.
- Palliatives are dependent on soil penetration to be effective. Compaction of soil prior to stabilization should be minimized. If compaction has occurred or the soil has high clay content, loosening of the surface may be necessary before applying the palliative.
- Do not apply palliatives in rainy conditions or when the soil has high moisture content. Verify that there is not rain in the forecast for the length of time recommended by the manufacturer to cure the palliative. Typically, a minimum of 24 hours is required.
- If the soil is excessively dry, pre-wetting may be necessary to ensure the palliatives do not cure too quickly.
- Palliative mixes may be supplied as a powder or a concentrated liquid. The designer should work with the supplier to establish exact dilution and application rates for the site. An application without enough water for the site and climate conditions will dry too quickly, and the soil particles will not bond properly. A too wet mix will result in a weaker bond that may not be sustained for the required duration of the stabilization.
- Palliatives should not be diluted until it is time for the palliative to be applied.
- Palliatives may be applied with mulch to stabilize slopes of 3:1 to 1.5:1. Additional criteria are in *Section 2.5 Mulching*.
- Palliatives may be mixed and applied with seed to establish vegetation. The palliative mix used for this application must be specified as one that is air and water permeable. The palliative will provide temporary stabilization until vegetation is established for final stabilization.

Vegetation Treatments

- If an area will not be disturbed by construction activities for a year or longer, vegetation is frequently the most cost-effective treatment.
- *Section 2.9 Vegetation* contains criteria for temporary stabilization with vegetation.

Other Treatments

- Gravel, recycled concrete or asphalt, or similar rock should be applied to temporary roads, contractor staging areas, employee parking lots and other portions of the site that receive daily traffic. The treatment will prevent dust and decrease the need for sediment controls on these areas during the duration of the construction project.
- Soil roughening, by driving tracked vehicles up and down slopes and across bare areas in irregular patterns, can be used to disrupt wind and water flow across the soil surface and decrease erosion for short periods of time. The track marks should be perpendicular to the predominate direction of water flow or wind.
- Similar to soil roughening, deep tillage (6 to 12 inches) in large open areas can significantly disrupt wind and drainage patterns to reduce erosion.
- Do not use "soil tackifiers" that are petroleum-based.

2.7.4 Design Guidance and Specifications

No specification for soil surface treatments is currently available in the Standard Specifications for Public Works Construction – North Central Texas Council of Governments.

2.7.5 Inspection and Maintenance Requirements

Soil surface treatments should be inspected regularly (at least as often as required by the TPDES Construction General Permit). Adequacy of watering for dust control should be visually monitored. If dust is observed, additional applications or different controls are needed.

Areas that have received a palliative treatment should be checked for breaks or eroded spots in the surface crust. This spots and areas that have been driven on or otherwise disturbed should be re-treated. Palliative treatments are intended to control sheet erosion. If rill erosion is detected during inspections, additional controls are needed.

2.9 Vegetation

Erosion Control

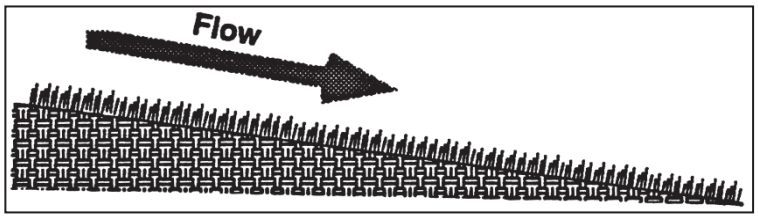

Description: Vegetation, used as an erosion control, is the sowing or sodding of grasses, small grains, or legumes to provide temporary and final vegetative stabilization for disturbed areas.

KEY CONSIDERATIONS

DESIGN CRITERIA:

- Specify preparation of the soil surface before seeding or sodding
- Minimum of 4 to 6 inches of top soil required, depending on subsurface conditions
- Specify soil amendments depending on soil conditions
- Select seed or sod species appropriate for the climate, season, and soil

ADVANTAGES / BENEFITS:

- More effective and easier to maintain than sediment controls during a long construction period
- May be used for temporary or final stabilization

DISADVANTAGES / LIMITATIONS:

- Not appropriate for areas with heavy pedestrian, vehicular traffic, or concentrated, high velocity flow
- May require days to weeks for adequate establishment
- Alternate erosion control is needed until vegetation is established

MAINTENANCE REQUIREMENTS:

- Inspect regularly
- Protect newly seeded areas from excessive runoff, high velocity flow, and traffic until vegetation is established
- Water and fertilize until vegetation is established
- Reseed and/or provide mulch or another control for bare spots
- Rake accumulations of sediment from the vegetation

TARGETED POLLUTANTS

- ● Sediment
- ◒ Nutrients & Toxic Materials
- ○ Oil & Grease
- ○ Floatable Materials
- ○ Other Construction Wastes

APPLICATIONS

Perimeter Control

Slope Protection

Sediment Barrier

Channel Protection

Temporary Stabilization

Final Stabilization

Waste Management

Housekeeping Practices

Fe=0.90

(*When fully established; lower while vegetation is first growing*)

IMPLEMENTATION CONSIDERATIONS

- ◒ Capital Costs
- ◒ Maintenance
- ○ Training
- ◒ Suitability for Slopes > 5%

Other Considerations:

- *Design is unique to soil and other conditions at each site*
- *Watering and other maintenance required until vegetation is established*

2.9.1 Primary Use

Vegetation is used as a temporary or final stabilization measure for areas disturbed by construction. As a temporary control, vegetation is used to stabilize stockpiles, earthen dikes, and barren areas that are inactive for longer than two weeks. As a final control at the end of construction, grasses and other vegetation provide good protection from erosion along with some filtering for overland runoff. Subjected to acceptable runoff velocities, vegetation can provide a positive method of long-term stormwater management as well as a visual amenity to the site.

Other control measures may be required to assist during the establishment of vegetation. These other controls include erosion control blankets, mulching, swales, and dikes to direct flow around newly seeded areas and proper grading to limit runoff velocities during construction.

2.9.2 Applications

Vegetation effectively reduces erosion in channels and swales and on stockpiles, dikes, and mild to medium slopes. Vegetative strips can provide some protection and sediment trapping when used as a perimeter control for utility and site development construction. Refer to *Section 3.15 Vegetated Filter Strips and Buffers* for more information.

In many cases, the initial cost of temporary seeding may be high compared to tarps or covers for stockpiles or other barren areas subject to erosion. This initial cost should be weighed with the amount of time the area is to remain inactive, since vegetation is more effective and the maintenance cost for vegetated areas is much less than most structural controls.

2.9.3 Design Criteria

General

- Vegetation is a highly effective erosion control when the vegetation is fully established. Until then, additional controls are needed. Sediment controls should not be removed from vegetated areas until the vegetation is established.
- On grades steeper than 20:1 (5 percent), anchored mulch or erosion control blankets are required to protect seeded areas until vegetation is established. Refer to *Section 2.5 Mulching* and *Section 2.3 Erosion Control Blankets* for design criteria.
- Vegetation may be used by itself for channel protection when the channel grade is less than 2 percent and the temporary control design storm (2-year, 24-hour) and the conveyance storm (25-year, 24-hour) flow velocities are less than 6 feet per second.
- If the velocity of the temporary control design storm is greater than 2 feet per second, erosion control blankets shall be used in the channel while vegetation is being established. Turf reinforcement mats are required when the velocity exceeds 6 feet per second. Refer to *Section 2.3 Erosion Control Blankets* and *Section 2.8 Turf Reinforcement Mats* for design criteria.
- Stabilization of channels with vegetation is limited to channels that have side slopes of 3:1 or flatter.
- On cut/fill slopes and channels designed to receive temporary or final vegetation, establishment of vegetation shall be initiated immediately after completing grading of the cut/fill slope or channel, and in no case later than 14 days after completion of grading on these features. It is not acceptable to delay establishing vegetation on these highly-erodible areas until completion of construction activities and stabilization of the remainder of the site.

Surface Preparation

- Unless infeasible, remove and stockpile existing topsoil at the start of grading activities. Store topsoil in a series of small stockpiles instead of one large stockpile to decrease the loss of aerobic soil micro-organisms during stockpiling.

- Interim or final grading must be completed prior to seeding or sodding.
- To minimize soil compaction of areas to be vegetated, limit vehicle and equipment traffic in these areas to the minimum necessary to accomplish grading.
- Install all necessary erosion structures such as dikes, swales, diversions, etc. prior to seeding or sodding.
- Spread stockpiled topsoil evenly over the disturbed area to be vegetated.
- Depth of topsoil shall be a minimum of 4 inches, with 6 inches required where the topsoil is over rock, gravel or otherwise unsuitable material for root growth. After spreading stockpiled topsoil, provide additional top soil as needed to achieve these depths.
- Compost Manufactured Topsoil as specified in TxDOT Special Specification 1001 may be used to achieve the specified depths or when it's infeasible to stockpile topsoil. Topsoil may also be acquired from another construction site if there is no space to stockpile the topsoil at that site.
- Topsoil shall have an organic content of 10 to 20 percent using ASTM D2974 Standard Test Methods for Moisture, Ash, and Organic Matter of Peat and Other Organic Soils.
- Topsoil that does not meet the organic content requirement shall be amended with General Use Compost as specified in TxDOT Special Specification 1001. Amendment should be three parts of topsoil to one part compost by volume thoroughly blended.
- Seed bed should be well pulverized and loosened to a minimum depth of 3 inches and then raked to have a uniform surface.
- When establishing vegetation from seed, groove or furrow slopes steeper than 3:1 on the contour line before seeding.

Plant Selection, Fertilization and Seeding

- Use only high quality, USDA certified seed.
- Use an appropriate species or species mixture adapted to the local climate, onsite soil conditions and the season as shown below, or consult with the local office of the Natural Resource Conservation Service (NRCS) or Texas AgriLife Extension Service for selection of proper species and application technique in this area.
- Seeding rate should be in accordance with the Tables 2.4, 2.5 and 2.6 as follow in this section or as recommended by the Natural Resources Conservation Service (NRCS) or Texas AgriLife Extension Service.
- Chemical fertilization is not recommended at the time of seeding, because it typically stimulates and is consumed by fast growing weeds that out-compete the slower growing grasses and legumes. If the topsoil has not been amended by compost as discussed above, an 0.5 inch layer of General Use Compost (TxDOT Special Specification 1001) is recommended as a surface treatment to protect the seed and provide slow release nutrients
- Evenly apply seed using a seed drill, cultipacker, terraseeding, or hydroseeder.
- Hydro-seeding should not be used on slopes of 5:1 or steeper unless Bonded Fiber Matrix is used.
- Seeded areas shall be thoroughly watered immediately after planting. Water shall be applied at a rate that moistens the top 6 inches of soil without causing runoff. Provide water daily for the first 14 days after seeding and thereafter as needed to aid in establishment of vegetation.
- Use appropriate mulching techniques (*Section 2.5 Mulching*) where necessary, especially during cold periods of the year. Mulch consisting of chipped site vegetation is discouraged, since the wood content may result in depleting nitrogen from the soil.

Sodding

- Use of sod should be limited to planned landscapes due to the relatively high water use of most types of sod grass.
- When sod is necessary to achieve immediate stabilization, buffalograss (*Buchloe dactyloides*) is recommended. Other types of sod may be used in landscaping when specified by a landscape architect for a commercial property or a homebuyer for a residential lot.
- The sod should be mowed prior to sod cutting so that the height of the grass shall not exceed 3 inches and should not be harvested or planted when its moisture condition is so excessively wet or dry that its survival shall be affected.
- Sod shall have a healthy, virile, system of dense, thickly matted roots throughout a minimum soil thickness of 0.75 inch.
- Sod shall be planted within 3 days after it is excavated.
- In areas subject to direct sunlight, pre-moisten prepared sod bed by watering immediately prior to placing sod.
- Sodded areas shall be thoroughly watered immediately after they are planted.

Temporary Vegetation

The following table lists recommended plant species for the North Central Texas region depending on the season for planting.

Table 2.4 Recommended Grass Mixture for Temporary Erosion Control

Season	*Common Name*	*Pure Live Seed Rate (Lbs/Acre)*
Sep 1 - Nov 30	Tall Fescue Western Wheat Grass Wheat (Red, Winter)	4.5 5.6 34.0
May 1 - Aug 31	Foxtail Millet	34.0
Feb 15 – May 31 Sep 1 – Dec 31	Annual Rye	20.0

Areas receiving temporary seeding and vegetation shall be landscaped, re-seeded or sodded with perennial species to establish final vegetation at the end of construction.

Vegetation for Final Stabilization

Sodding or seeding may be used to establish vegetation for final stabilization of areas disturbed by construction activity. The vegetation must achieve a cover that is 70 percent of the native background vegetative cover to be considered final stabilization. Sod will achieve this coverage quicker than seeding; however, sod is usually more expensive than seeding. Sod is most cost-effective for small areas or areas of concentrated flow or heavy pedestrian traffic where it will be difficult to establish vegetation by seeding.

Grass seed for establishing final stabilization can be sown at the same time as seeding for temporary (annual) vegetation. Drought tolerant native vegetation is recommended rather than exotics as a long-term water conservation measure. Native grasses can be planted as seed or placed as sod. Buffalo 609, for example, is a hybrid grass that is placed as sod. Fertilizers are not normally used to establish native grasses, but mulching is effective in retaining soil moisture for the native plants.

Table 2.5 Recommended Grass Mixture for Final Stabilization of Upland in Rural Areas

County	Planting Date	Clay Soils Species and Pure Live Seed Rate (Lbs/Acre)		Sandy Soils Species and Pure Live Seed Rate (Lbs/Acre)	
Erath Hood Johnson Palo Pinto Parker Somervell Tarrant Wise	February 1 – May 15	Green Sprangletop Sideoats Grama (El Reno) Bermudagrass Little Bluestem (Native) Blue Grama (Hachita) Illinois Bundleflower	0.3 2.7 0.9 1.0 0.9 1.0	Green Sprangletop Sand Lovegrass Bermudagrass Weeping Lovegrass (Ermelo) Sand Dropseed Partridge Peal	0.3 0.5 1.8 0.8 0.4 1.0
Collin Dallas Denton Ellis Kaufman Navarro Rockwell	February 1 – May 15	Green Sprangletop Bermudagrass Sideoats Grama (El Reno) Little Bluestem (Native) Buffalograss (Texoka) Illinois Bundleflower	0.3 1.2 2.7 2.0 1.6 1.0	Green Sprangletop Bermudagrass Weeping Lovegrass (Ermelo) Sand Lovegrass Sand Dropseed Partridge Pea	0.3 1.8 0.6 0.6 0.4 1.0
Hunt	February 1 – May 15	Green Sprangletop Sideoats Grama (El Reno) Bermudagrass Little Bluestem (Native) Illinois Bundleflower	0.3 3.2 1.8 1.7 1.0	Green Sprangletop Bermudagrass Bahiagrass (Pensacola) Sand Lovegrass Weeping Lovegrass (Ermelo) Partridge Pea	0.3 1.5 6.0 0.6 0.8 1.0

(Source: TxDOT Standard Specifications for Construction and Maintenance of Highways, Streets and Bridges, Item 164)

Table 2.6 Recommended Grass Mixture for Final Stabilization of Upland in Urban Areas

County	Planting Date	Clay Soils Species and Pure Live Seed Rate (Lbs/Acre)		Sandy Soils Species and Pure Live Seed Rate (Lbs/Acre)	
Erath Hood Johnson Palo Pinto Parker Somervell Tarrant Wise	February 1 – May 15	Green Sprangletop Sideoats Grama (El Reno) Bermudagrass Buffalograss (Texoka)	0.3 3.6 2.4 1.6	Green Sprangletop Sideoats Grama (El Reno) Bermudagrass Sand Dropseed	0.3 3.6 2.1 0.3
Collin Dallas Denton Ellis Kaufman Navarro Rockwell	February 1 – May 15	Green Sprangletop Sideoats Grama (El Reno) Buffalograss (Texoka) Bermudagrass	0.3 3.6 1.6 2.4	Green Sprangletop Buffalograss (Texoka) Bermudagrass Sand Dropseed	0.3 1.6 3.6 0.4
Hunt	February 1 – May 15	Green Sprangletop Bermudagrass Sideoats Grama (Haskell)	0.3 2.4 4.5	Green Sprangletop Bermudagrass	0.3 5.4

(Source: TxDOT Standard Specifications for Construction and Maintenance of Highways, Streets and Bridges, Item 164)

Vegetation for final stabilization of channels requires grasses that are tolerant of periodic inundation, such as Bermuda grass, Kentucky bluegrass or a grass-legume mixture.

Additional Considerations

- Conditions for establishing vegetation vary significantly from site to site. Therefore, specifics of the vegetation design should be prepared based on the soil, slopes, drainage patterns, and the purpose of the vegetation at a each site.
- For construction activities that include landscaping in the development plans, the landscape architect should be consulted when specifying vegetation for temporary or final stabilization of disturbed areas.
- Vegetation is easier to establish if equipment and vehicle traffic is managed onsite to minimize soil compaction by traffic in the disturbed area that will be vegetated.
- Establishing a good vegetative cover is dependent on the season of the year. Projects that commence in the fall of the year may not be candidates for using vegetation as an erosion control.
- Where vegetation is used in swales and channels it may be necessary to use sod, rather than seeding, to establish an erosion resistant surface that accommodates rainfall runoff flows.
- Mulch should be used to enhance vegetative growth, in that mulch protects seeds from heat, prevents soil moisture loss, and provides erosion protection until the vegetation is established. Compost mulch has the additional benefit of providing some slow-release nutrients.
- Fertilizers have both beneficial and adverse effects. Fertilizers provide nutrients to the vegetation, but fertilizers are also a source of unwanted nutrients in streams and lakes. In this latter regard, they are a pollutant. The use of native vegetation rather than exotics reduces the need for fertilizers. Organic fertilizers, such as compost mulch, are generally preferred over chemical fertilizers. They provide a slow release of nutrients over a longer period of time and are less likely to cause environmental problems.
- Steep slopes represent a problem for establishing vegetation. Hydraulic mulches are useful for establishing vegetation on slopes. Refer to *Section 2.5 Mulching*.

2.9.4 Design Guidance and Specifications

Additional criteria for the application of vegetation in channels are in *Section 3.6.3 of the iSWM Criteria Manual* and design guidance is in *Section 3.2 of the Hydraulics Technical Manual*.

Specifications for construction of this item may be found in the Standard Specifications for Public Works Construction – North Central Texas Council of Governments, Item 202 Landscaping. Additional specifications for the following components of this item are in the Standard Specifications for Construction and Maintenance of Highways, Streets, and Bridges (TxDOT 2004):

- Topsoil, Item 160.
- Compost, Item 161.
- Sodding for Erosion Control, Item 162.
- Seeding for Erosion Control, Item 163.
- Fertilization, Item 164.
- Vegetative Watering 165.

2.9.5 Inspection and Maintenance Requirements

Protect newly seeded areas from excessive runoff and traffic until vegetation is established. Include a watering and fertilizing schedule in the iSWM Construction Plan facilitate the establishment of the vegetation. Vegetation for final stabilization must be maintained until the vegetative cover is 70 percent of the native background vegetative cover.

Vegetation should be inspected regularly (at least as often as required by the TPDES Construction General Permit) to ensure that the plant material is established properly and remains healthy. Bare spots shall be reseeded and/or protected from erosion by mulch or other measures. Accumulated sediment

deposited by runoff should be removed to prevent smothering of the vegetation. In addition, determine the source of excess sediment and implement appropriate measures to control the erosion.

3.2 Depressed Grade (Curb Cut-Back) Sediment Trap

(Source: Modified from City of Plano BMP SP-12)

Sediment Control

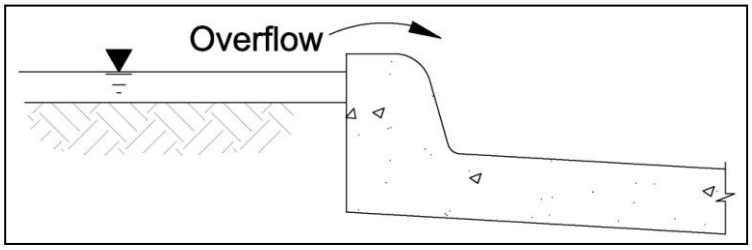

Description: A depressed grade sediment trap is a sediment barrier created by grading or leaving the grade of an area at the back of curb or edge of pavement depressed to detain the surface flow until overflows onto the pavement.

KEY CONSIDERATIONS

DESIGN CRITERIA:

- Minimum 4 feet width and 1.5 inch depth
- Maximum 2 percent longitudinal slope and 3 percent transverse slope
- Erosion control blankets required at low point (sag) curb inlets

ADVANTAGES / BENEFITS:

- Inexpensive sediment trap for very small areas
- Alternative to inlet protection for projects within rights-of-way
- May be used on individual residential lots in certain situations

DISADVANTAGES / LIMITATIONS:

- May be disturbed and altered by construction equipment driving through it
- Limited application to very small areas along rights-of-way and residential lots

MAINTENANCE REQUIREMENTS:

- Inspect regularly
- Use a shovel or blade to remove sediment
- Re-grade as necessary
- Inspect erosion control blankets and repair as needed

TARGETED POLLUTANTS

- ● Sediment
- ○ Nutrients & Toxic Materials
- ○ Oil & Grease
- ○ Floatable Materials
- ○ Other Construction Wastes

APPLICATIONS

- **Perimeter Control**
- **Slope Protection**
- **Sediment Barrier**
- **Channel Protection**
- **Temporary Stabilization**
- **Final Stabilization**
- **Waste Management**
- **Housekeeping Practices**

Fe=0.50-0.75
(*Depends on soil type*)

IMPLEMENTATION CONSIDERATIONS

- ○ Capital Costs
- ◒ Maintenance
- ○ Training
- ○ Suitability for Slopes > 5%

Other Considerations:

- *None*

3.2.1 Primary Use

Depressed grade sediment traps are used to intercept and trap flows from very small drainage areas (i.e. parkways, medians, and pavements).

3.2.2 Applications

Depressed grade sediment traps are used at construction sites within rights-of-way to control small drainage areas. It can be used at the back of curb or edge of pavement where the drainage area is limited to the parkway or median. It can also be used where sections of pavement are removed and replaced for pavement repair or underground utility installation.

3.2.3 Design Criteria

- The width of the excavated area when installed back of curb shall be a minimum of 4 feet.
- The longitudinal slope along the back of curb depression cannot exceed 2 percent and the transverse slope toward the back of curb cannot exceed 3 percent. Steeper slopes require additional sediment controls.
- The maximum width of the right-of-way draining into the sediment trap shall be 11.5 feet. No other drainage area may contribute runoff to the sediment trap.
- The depressed grade sediment trap may be used back of curb for sediment control on single residential lots if no other drainage area contributes runoff to the depressed area. The designer shall calculate the minimum width of the depressed area, based on a 1.5 inch depth, the length of the curb at the front of the lot, and the volume of runoff from the lot for the temporary control design storm (2-year, 24-hour).
- Erosion control blankets (ECBs) are required at low or sag points along the curb where flow may become more concentrated. Criteria for ECBs are in *Section 2.3 Erosion Control Blankets*.
- The excavation of the cut may be offset a maximum distance of 5 feet from the curb to avoid utility boxes.
- When a curb cut for a driveway is encountered and no driveway has been constructed, securely install a plank of wood (2x4, 4x4) across the cur cut in order to continue the curb.

3.2.4 Design Guidance and Specifications

No specification for depressed grade sediment trap is currently available in the Standard Specifications for Public Works Construction – North Central Texas Council of Governments.

3.2.5 Inspection and Maintenance Requirements

Depressed grade sediment traps should be inspected regularly (at least as often as required by TPDES Construction General Permit). Inspect the depression area periodically to ensure that the necessary storage volume is available. Use a shovel or blade to remove sediment from the area back of curb as needed. Re-grade the depression if it's disturbed by construction traffic.

The low points where this method is used should also be monitored during rain events to ensure the erosion control blankets are adequate to prevent sediment from flowing onto the pavement. Additional controls shall be added as needed.

3.2.6 Example Schematics

The following schematics are example applications of the construction control. They are intended to assist in understanding the control's design and function.

The schematics are **not for construction**. They may serve as a starting point for creating a construction detail, but they must be site adapted by the designer. In addition, dimensions and notes appropriate for the application must be added by the designer.

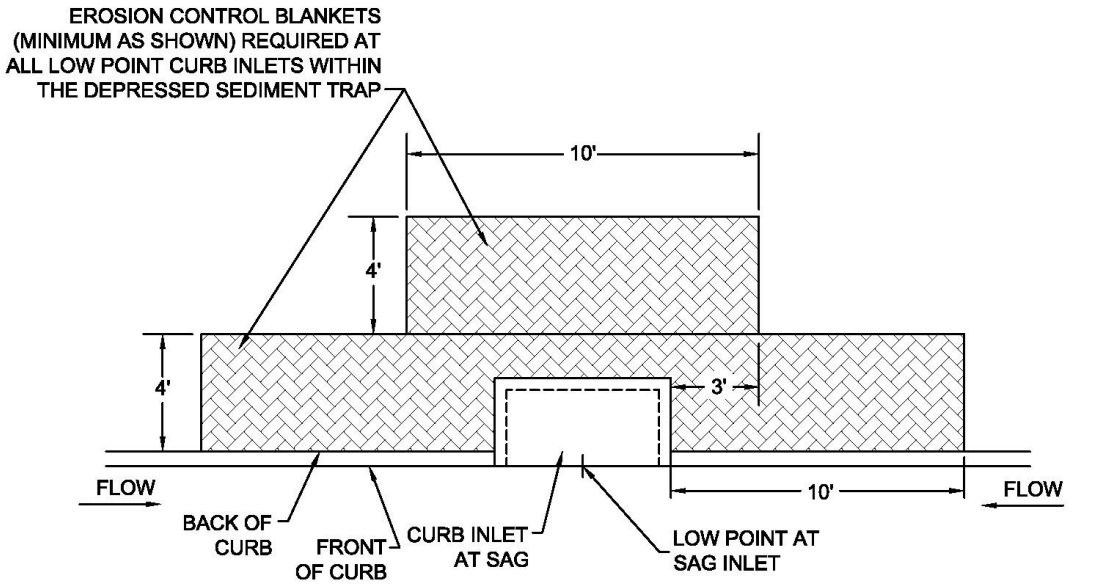

DEPRESSED BACK OF CURB SEDIMENT TRAP PLAN VIEW

N.T.S.

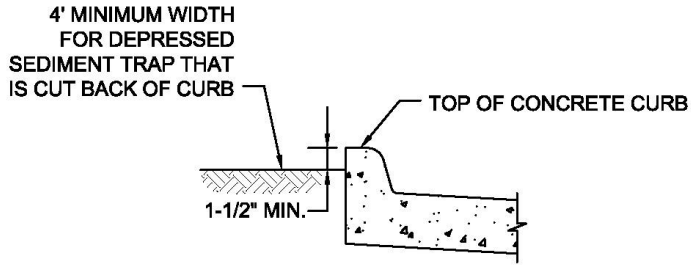

DEPRESSED BACK OF CURB SEDIMENT TRAP CROSS SECTION

N.T.S.

NOTES:
1. THE DEPRESSED SEDIMENT TRAP MAY BE OFFSET A MAXIMUM DISTANCE OF 5 FEET FROM THE CURB IF NECESSARY TO AVOID UTILITY BOXES.
2. WHEN A CURB CUT FOR A FUTURE DRIVEWAY IS ENCOUNTERED, INSTALL 2" X 4" BOARDS ACROSS THE CURB TO FORM A TEMPORARY "CURB" FOR THE SEDIMENT TRAP.

Figure 3.2 Schematics of Depressed Grade (Curb Cut-Back) Sediment Trap
(Source: City of Plano BMP SP-12)

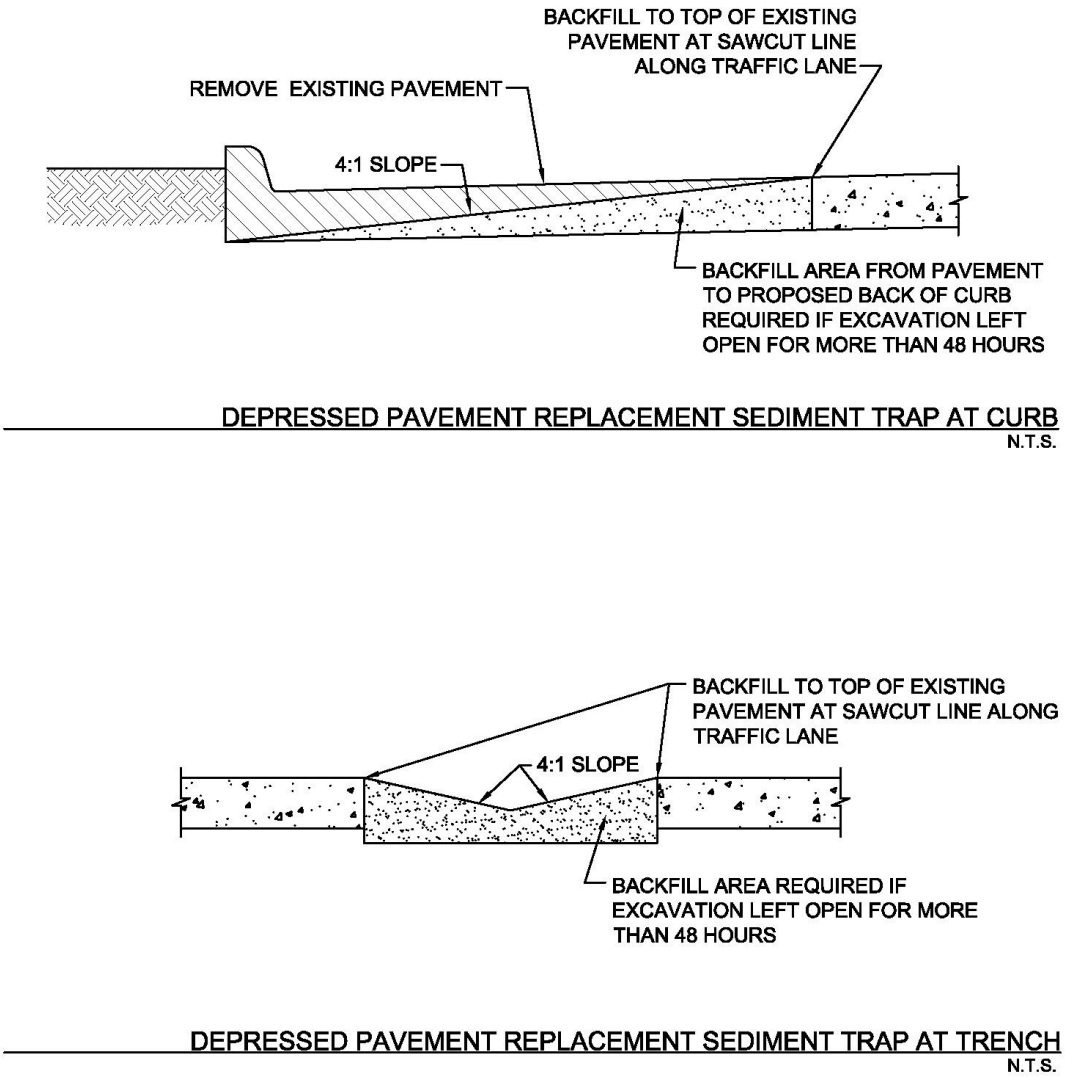

Figure 3.3 Schematics of Depressed Pavement Replacement Sediment Trap
(Source: City of Plano BMP SP-12)

3.3 Dewatering Controls

Sediment Control

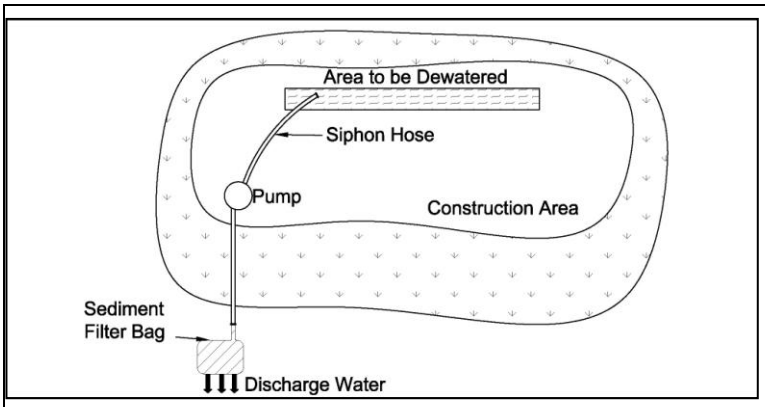

Description: Dewatering controls consist of methods and devices to remove suspended soil in water that is pumped or otherwise discharged from foundations, trenches, excavations, and other low areas. The controls may be the sediment controls already onsite (e.g. silt fence, organic filters tubes) or dedicated dewatering devices such as sediment tanks and sediment filter bags.

KEY CONSIDERATIONS

DESIGN CRITERIA:

- Discharge of pumped water is prohibited unless controlled for the removal of suspended soil
- Select controls based on dewatering flow rate and duration and available space
- Dewatering discharge points must be protected for high velocities

ADVANTAGES / BENEFITS:

- Removes suspended soil and some pollutants from pumped water
- Works well with passive treatment systems for removal of clay soil particles
- Water may be applied to other onsite uses

DISADVANTAGES / LIMITATIONS:

- Requires frequent maintenance

MAINTENANCE REQUIREMENTS:

- Inspect regularly
- Monitor for erosion, control failure and unauthorized discharges frequently while pumping
- Clean and replace controls as they are filled with sediment

TARGETED POLLUTANTS

- ● Sediment
- ○ Nutrients & Toxic Materials
- ◒ Oil & Grease
- ○ Floatable Materials
- ○ Other Construction Wastes

APPLICATIONS

Perimeter Control
Slope Protection
Sediment Barrier
Channel Protection
Temporary Stabilization
Final Stabilization
Waste Management
Housekeeping Practices

Fe=0.50-0.75
(*Depends on soil type*)

IMPLEMENTATION CONSIDERATIONS

- ◒ Capital Costs
- ● Maintenance
- ◒ Training
- ○ Suitability for Slopes > 5%

Other Considerations:

- *None*

3.3.1 Primary Use

Dewatering controls are used to remove suspended soil in water that is pumped or otherwise discharged from foundations, trenches, excavations, and other low areas. Some dewatering controls, such as the temporary sediment tank, may also be useful in removing other pollutants.

3.3.2 Applications

Dewatering controls are applicable whenever water must be pumped from a low area on a construction site before construction can continue in that area. Pumping of foundations, excavated trenches, and utility vaults are common on development projects.

Dewatering controls may also apply when a temporary cofferdam has been constructed to dewater a normally wet area for construction, such as road crossings of creeks and bank stabilization projects. Water pumped from these areas must be flow through a control before it is discharged back to the water body.

3.3.3 Design Criteria

General

- Construction plan notes shall prohibit the discharge of water from dewatering activities into public streets, flumes, storm drains, creeks or other drainage ways unless controlled to remove suspended soil or other pollutants.
- The designer shall determine whether dewatering will be a batch operation after storm events or a continuous operation due to high groundwater and specify controls accordingly. Controls for continuous dewatering need to provide effective removal of sediment over long periods. Controls that clog easily are not appropriate for controlling long-term dewatering operations.
- Pumped water that has sheen or other evidence of pollutants shall be collected and sampled before it is discharged. State or local discharge permit requirements may exist for the pollutant(s) suspected of being in the water.
- Regulations or effluent criteria that apply to stormwater discharges from a construction activity typically also apply to water discharged from dewatering activities.
- The dewatering controls in this section are most effective with sands and coarse silts. Dewatering controls may be combined with a passive treatment system to provide higher sediment removal rates for fine silt and clay soil particles. Liquid polymers injected at the pump or solid and gel forms installed at the discharge generally work well to promote floc growth and settling of clay soil. Design criteria are contained in *Section 3.7 Passive Treatment System*.

Conventional Controls

- Discharges from dewatering are typically concentrated and have relatively high flow rates and velocities. If conventional controls are used, velocity dissipaters and/or flow spreaders or levelers are required before the control to prevent the discharge from causing erosion and damaging the control.
- The best control for pumped water is to discharge it to a vegetated area.
- Pumped water should be sprayed through a nozzle on the end of a discharge hose or directed to a device that dissipates velocity and disperses flow before the water enters the vegetated area.
- The vegetated area must be large enough to detain the volume being dewatered. The size of area needed is dependent on type of vegetation (interception storage and water uptake capacity) and soil type (infiltration rate) and condition (wet or dry). Vegetation may not be a feasible option if dewatering is due to a large or prolonged storm event and the vegetated area is saturated or if the soil has high clay content.

- If a vegetated area is not available or feasible, the discharge from dewatering may be directed to a conventional sediment barrier, such silt fence, organic filter tubes, sediment basin, or stone outlet sediment trap.
- Opportunities for using the water onsite should be considered, particularly where groundwater intrusion results in frequent or continuous dewatering. The water may be collected in a temporary, onsite storage container or holding pit and used to water vegetation for stabilization, applied for dust control, or used for pavement subgrade preparation. If any of these water needs are present at the time of dewatering, the water may be applied directly to this use without sediment controls, since no discharge occurs.

Sediment Filter Bag

- Sediment filter bags are specifically designed to control pumped water and connect directly to the pump discharge line.
- Show location of the filter bag on the drawings. The bag installed where its discharge will flow away from the disturbed area and onto vegetation or into a swale or drainage ditch with erosion and sediment controls.
- Bags should be placed on a level, stable surface that is prepared with mulch, straw, small aggregate, or other material as recommended by the manufacturer. In some cases, the bag may be placed directly on vegetation or well graded soil. The key is to have a surface without rocks or other protrusions that could puncture the bag.
- The bag should be made of a non-woven, needle-punched, geotextile that meets the following minimum criteria:
    - 205 lbs minimum tensile strength using ASTM D4632 Test Method for Grab Breaking Load and Elongation of Geotextiles.
    - 130 lbs minimum puncture strength using ASTM D4833 Test Method for Index Puncture Resistance of Geotextiles, Geomembranes, and Related Products.
    - 400 psi minimum Mullen burst strength using ASTM D3786 Standard Test Method for Hydraulic Bursting Strength of Textile Fabrics-Diaphragm Bursting Strength Tester Method.
    - Minimum 70 percent at 500 hours ultraviolet resistance using ASTM D4355 Standard Test Method for Deterioration of Geotextiles by Exposure to Light, Moisture, and Heat in a Xenon Arc Type Apparatus.
    - 85 to 110 gpm/ft^2 water flow rate using ASTM D4491 Standard Test Methods for Water Permeability of Geotextiles by Permittivity.
- Apparent opening size using ASTM D4751 Test Method for Determining Apparent Opening Size of a Geotextile should be specified based on the type of soil that will be in the discharge. A size that is too large will not trap the sediment; however, a size that is too small will create an unnecessary head for the dewatering pump to work against.
- The smallest apparent opening size currently available is 70 microns. This size will not capture fine silt and clay particles. A passive treatment system will be necessary with the bag to capture these soils.
- Bags are available in sizes ranging from 6 feet x 6 feet to 15 feet x 25 feet. The size of the bag should be specified based on availability of space, flow rates, and duration of use. If space is available, larger bags will last longer between replacements and may have a lower price per square foot. However, larger bags are heavier when sediment-laden. Equipment must be available to lift and remove the bag from the site for disposal.
- Bags are not reusable. Make sure they are installed at a location where equipment has access to the bags for lifting and removal without causing erosion or damaging other erosion and sediment controls.

Temporary Sediment Tank

- A temporary sediment tank is a compartmented container through which sediment-laden water is pumped to trap and retain sediment before discharging the water to drainage ways, adjoining properties, and rights-of-way below the sediment tank site.
- A temporary sediment tank is typically used at construction sites in urban areas where conventional methods of sediment removal are not practical. It is also used on sites where excavations are deep and space is limited, such as urban construction, where direct discharge of sediment-laden water to streams and storm drainage systems should be avoided.
- The location of temporary sediment tanks should facilitate easy cleanout and disposal of the trapped sediment to minimize interference with construction activities and pedestrian traffic. The tank size should be determined according to the storage volume of the sediment tank, with 1 cubic foot of storage for each gallon per minute of pump discharge capacity.
- A temporary sediment tank can be used as either a sedimentation or filtration device. If an oil sheen is present in the runoff, an underflow baffle may be used in the tank to remove it. However, local and state discharge regulations and permits may apply and should be checked before discharging.
- For use as a small scale sedimentation basin, de-watering discharge is directed into the temporary sediment tank to a level below the tank midpoint and held for a minimum of 2 hours to allow settlement of a majority of the suspended particles. This detention time is insufficient for removal of fine silt and clay soil particles. Passive treatment systems should be combined with the tank if these soil particles will be present.
- The tank should be designed for a controlled release when the contents of the tank reach a level higher than the midpoint.
- As a filtration device, a temporary sediment tank is used for collecting de-watering discharge and passing it through a filtered opening at the outlet of the tank to reduce suspended sediment volume. The filter opening in the temporary sediment tank should have an Apparent Opening Size (AOS) (see *Section 3.10 Silt Fence*) of 70 or smaller.
- The trapped sediment and stormwater must be disposed of properly.

3.3.4 Design Guidance and Specifications

No specification for dewatering controls is currently available in the Standard Specifications for Public Works Construction – North Central Texas Council of Governments.

3.3.5 Inspection and Maintenance Requirements

Dewatering controls should be inspected regularly (at least as often as required by the TPDES Construction Permit). Dewatering discharge points should be checked for erosion. Eroded areas should be repaired, and erosion controls should be installed to prevent future erosion.

Dewatering pumps and sediment controls should be monitored frequently, at least hourly, while pumps are in operation to prevent unauthorized discharges and to catch erosion problems or control failure.

Conventional sediment controls should be inspected at least weekly when used for continuous dewatering, because they will become overcome with sediment more quickly than when used to control runoff from storm events. The controls shall be maintained according to the criteria in their respective sections. They should be replaced when they no longer provide the necessary level of sediment removal.

Sediment filter bags should be checked to determine if they need replacing. The bags cannot be cleaned or reused. They should be used until they reach the manufacturer's recommended capacity. The entire bag with sediment can be disposed of as solid waste. If a controlled location onsite or a spoil site is available, the bag can be cut open and the sediment spread on the ground. Only the bag is waste in this case.

Sediment tanks should be cleaned when they become ⅓ full of sediment. To facilitate maintenance, the tanks need to be located with easy access for regular pump out. The rate at which a tank is pumped depends on site-specific considerations such as rainfall and sediment loads to the system. Regular inspections will help determine pump out frequency and prevent overloading and failure of the system.

3.3.6 Example Schematics

The following schematics are example applications of the construction control. They are intended to assist in understanding the control's design and function.

The schematics are **not for construction**. They may serve as a starting point for creating a construction detail, but they must be site adapted by the designer. In addition, dimensions and notes appropriate for the application must be added by the designer.

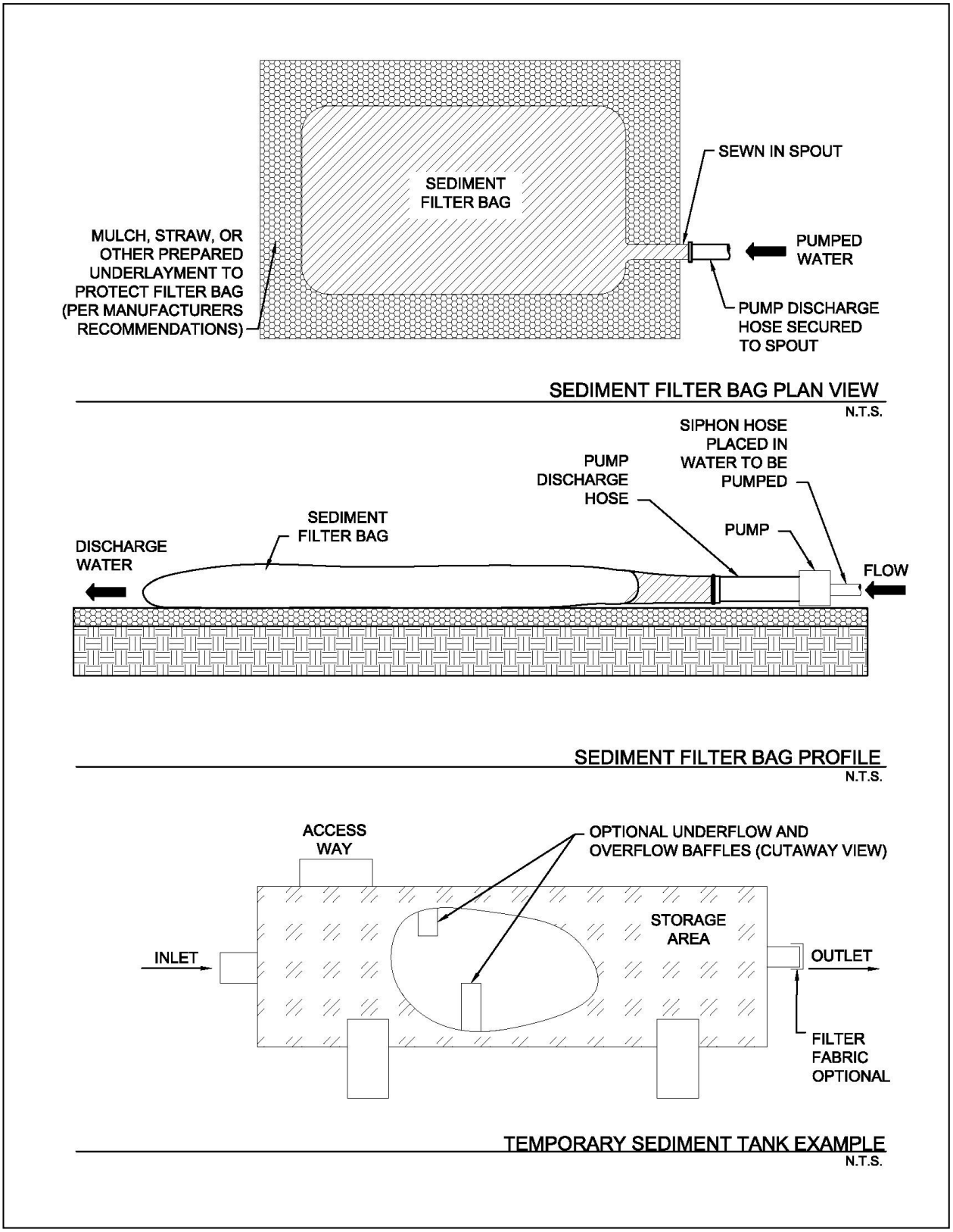

Figure 3.4 Schematics of Dewatering Controls

3.4 Inlet Protection

Sediment Control

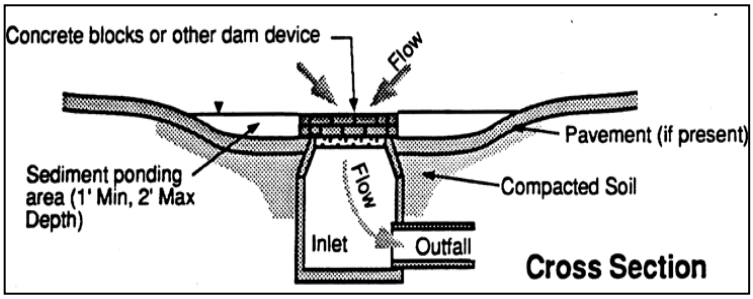

Description: Inlet protection consists of a variety of methods to intercept sediment at low point inlets through the use of depressed grading, filter stone, filter fabric, inlet inserts, organic filter tubes and other materials. The protection devices are placed around or across the inlet openings to provide localized detention or filtration of sediment and floatable materials in stormwater. Protection devices may be assembled onsite or purchased as manufactured assemblies.

KEY CONSIDERATIONS

DESIGN CRITERIA:

- Evaluate drainage patterns to ensure inlet protection will not cause flooding of roadway, property or structures
- Never block entire inlet opening
- Size according to drainage area and flow rates
- Include flow bypass for clogged controls and large storm events

ADVANTAGES / BENEFITS:

- May be the only feasible sediment control when all construction is located within rights-of-way

DISADVANTAGES / LIMITATIONS:

- Limited effectiveness and reliability
- High maintenance requirements
- Has potential to flood roadways or adjacent properties

MAINTENANCE REQUIREMENTS:

- Inspect regularly
- Check for and remove blockage of inlet after every storm event
- Remove sediment before it reaches half the design height or volume of the inlet protection, more frequently for curb inlets
- Repair or replace damaged materials
- Clean or replace filter stone and organic filter tubes is when clogged with sediment

TARGETED POLLUTANTS

◒ Sediment

○ Nutrients & Toxic Materials

○ Oil & Grease

◒ Floatable Materials

○ Other Construction Wastes

APPLICATIONS

Perimeter Control

Slope Protection

Sediment Barrier

Channel Protection

Temporary Stabilization

Final Stabilization

Waste Management

Housekeeping Practices

Fe=0.35-0.65
(*Depends on soil type*)

IMPLEMENTATION CONSIDERATIONS

◒ Capital Costs

● Maintenance

○ Training

○ Suitability for Slopes > 5%

Other Considerations:

- *Traffic hazards*
- *Passage of larger storm events without causing flooding*
- *Flow diversion to other inlets or drainage points*

3.4.1 Primary Use

Inlet protection is typically used as a secondary sediment barrier, due to its limited effectiveness and numerous disadvantages. It is used to reduce sediment in storm sewer systems by serving as a back-up system for areas that have newly applied erosion controls or for other sediment controls that cannot achieve adequate sediment removal by themselves.

Inlet protection may be used as a primary sediment control only when all other primary controls are infeasible because of site configuration or the type of construction activity.

3.4.2 Applications

Inlet protection is best applied at low point (sump) inlets where stormwater runoff will pond behind the protection measure, and then either filter through the protection measure or flow over a weir created by it. Most inlet protection measures depend on ponding to be effective. These types of inlet protection are not applicable to on-grade curb inlets, where the inlet protection will cause stormwater runoff to bypass the inlet and overload downstream inlets. Only inlet protection measures that allow for use of the inlet opening (e.g. inlet inserts) are applicable as inlet protection for on-grade inlets.

Inlet protection is normally used in new developments with new inlets and roads that are not in public use. It has limited applications in developed areas due to the potential for flooding, traffic safety, pedestrian safety, and maintenance problems. Potential applications in developed areas are on parking lot inlets where water can pond without causing damage and during major repairs to existing roadways where no other controls are viable.

The application of inlet protection is highly variable due to the wide variety of inlet configurations (existing and new) and site conditions. The schematics in Section 6 show example applications; however, applications in most cases must be site adapted. Different methods and materials may be used. It is the responsibility of the designer to ensure that the methods and materials applied for inlet protection are appropriate to the site and flow conditions following the design criteria in Section 3.

3.4.3 Design Criteria

General

- Drainage patterns shall be evaluated to ensure inlet protection will not divert flow or flood the roadway or adjacent properties and structures.
- Inlet protection measures or devices that completed block the inlet are prohibited. They must also include a bypass capability in case the protection measures are clogged.
- Inlet protection must be designed to pass the conveyance storm (25-year, 24-hour) without creating a road hazard or damaging adjacent property. This may be accomplished by any of the following measures:
    - An overflow weir on the protection measure.
    - An existing positive overflow swale on the inlet.
    - Sufficient storage volume around the inlet to hold the ponded water until it can all filter into the inlet.
    - Other engineered method.
- Positive overflow drainage is critical in the design of inlet protection. If overflow is not provided for at the inlet, temporary means shall be provided to route excess flows through established swales, streets, or other watercourses to minimize damage due to flooding.
- Filter fabric and wire mesh used for inlet protection shall meet the material requirements specified in *Section 3.10 Silt Fence*.

- Block and gravel (crushed stone or recycled concrete) protection is used when flows exceed 0.5 cubic feet per second and it is necessary to allow for overtopping to prevent flooding.
- The tube and filler for organic filter tubes shall be in accordance with the criteria in *Section 3.6 Organic Filter Tube*.
- Bags used to secure inlet protection devices on pavement shall be filled with aggregate, filter stone, or crushed rock that is less likely than sand to be washed into an inlet if the bag is broken. Filled bags shall be 24 to 30 inches long, 16 to 18 inches wide, and 6 to 8 inches thick. Bags shall be polypropylene, polyethylene, or polyamide woven fabric with a minimum unit weight of 4 ounces per square yard and meet the following criteria:
    - Greater than 300 psi Mullen Burst Strength using ASTM D3786 Standard Test Method for Hydraulic Bursting Strength of Textile Fabrics-Diaphragm Bursting Strength Tester Method.
    - Greater than 70 percent UV Stability using ASTM D4355 Standard Test Method for Deterioration of Geotextiles by Exposure to Light, Moisture, and Heat in a Xenon Arc Type Apparatus.

Curb Inlet Protection

- Municipality approval is required before installing inlet protection on public streets.
- Special caution must be exercised when installing curb inlet protection on publicly traveled streets or in developed areas. Ensure that inlet protection is properly designed, installed and maintained to avoid flooding of the roadway or adjacent properties and structures.
- A two inch overflow gap or weir is required on all curb inlet protection devices.
- Traffic cones, warning signs, or other measures shall be installed to warn motorists when the inlet protection measures extend beyond the gutter line.
- 2 inch X 4 inch Weir Protection:
    - Bend wire mesh around the 2 inch x 4 inch board and staple to the board. Bend wire mesh around the bottom of the board, the curb opening, and along the pavement to form a cage for the rock.
    - Rock bags shall be placed perpendicular to the curb, at both ends of the wooden frame, to disrupt the flow and direct water into the rock filter. Stack the bags two high if needed.
- Organic Filter Tube Protection:
    - The diameter of the tube shall be at least 2 inches less than the height of the inlet opening. The tube should not be allowed to block the entire opening, since it will clog.
    - The tube shall be placed on 4 inch x 4 inch or 2 inch x 4 inch wire mesh to prevent the tube from sagging into the inlet.
    - The tube should be long enough to extend a minimum of 12 inches past the curb opening on each side of the inlet.
- Hog Wire Weir Protection:
    - The filter fabric and wire mesh shall extend a minimum of 12 inches past the curb opening on each side of the inlet.
    - Filter fabric shall be placed on 2 inch x 4 inch wire mesh to prevent the tube from sagging into the inlet.
    - Rock bags are used to hold the wire mesh and filter fabric in contact with the pavement. At least one bag shall be placed on either side of the opening, parallel to and up against the concrete curb. The bags are in intended to disrupt and slow the flow and ensure it does not go under the fabric. Add bags if needed.

- If a board is used to anchor the wire mesh and fabric instead of rock bags, the board shall be secured with concrete nails at 3 inches on center. Upon removal clean any dirt or debris from the nailing locations, apply chemical sanding agent, and apply non-shrink grout flush with surface of concrete.

- Block and Gravel Protection:
  - Concrete blocks shall be standard 8 inch x 8 inch x 16 inch concrete masonry units and shall be in accordance with ASTM C139, Concrete Masonry Units for Construction. Filter gravel shall be ¾ inch washed stone containing no fines. Angular shaped stone is preferable to rounded shapes.
  - Concrete blocks are to be placed on their sides in a single row around the perimeter of the inlet, with ends abutting. Openings in the blocks should face outward, not upward. ½ inch x ½ inch wire mesh shall then be placed over the outside face of the blocks covering the holes. Filter gravel shall then be piled against the wire mesh to the top of the blocks with the base of the stone being a minimum of 18 inches from the blocks.
  - Alternatively, where loose stone is a concern (streets, etc.), the filter gravel may be placed in appropriately sized filter fabric bags.
  - Periodically, when the gravel filter becomes clogged, the gravel must be removed and cleaned in a proper manner or replaced with new gravel and piled back against the wire mesh.
- Organic Filter Tube On-Grade Protection:
  - Organic filter tubes may be used to provide sediment control at on-grade curb inlets where the tube will not be a traffic hazard, such as on residential streets where the pavement adjacent to the curb is allocated to parked cars. Tubes should not be used in this manner where they will extend into an active travel lane.
  - The filter tube shall be secured in a U-shape by rock bags. Runoff flowing in the gutter will pond within the U until it filters through the tube or overflows around the end.
- Inlet protection shall be phased on curb inlets being constructed. Controls shall be installed on the pipe inlet at the bottom of the catch basin as soon as it is installed and while the inlet box and top are being formed or placed.

Area Inlet Protection

- Installation methods for protection on area inlets vary depending on the type of inlet (drop, “Y,” or other) and the type and use of the surface surrounding the inlet (parking lot, playground, etc.). It is the responsibility of the designer to appropriately adapt inlet protection measures and their installation methods for each site condition. Several types may be needed on one project.
- Filter Fabric Protection:
  - Filter fabric protection is appropriate where the drainage area is less than one acre and the basin slope is less than five (5) percent. Filter fabric, posts, and wire mesh shall meet the material requirements specified in *Section 3.10 Silt Fence*.
  - A 6 inch wide trench is to be cut 6 inches deep at the toe of the fence to allow the fabric to be laid below the surface and backfilled with compacted earth or gravel. This entrenchment prevents any bypass of runoff under the fence.
  - Stone overflow structures, according to the criteria in *Section 3.10 Silt Fence* shall be installed where flow to the inlet is concentrated and more than 1 cubic feet per second.
- Excavated Impoundment Protection:
  - Excavated inlet protection is usually the most effective type of area inlet protection; however, it is only applicable to drop inlets. It should not be applied to Y inlets because it will undermine the concrete pad surrounding the inlet opening. Nor can it be used for inlets on pavement.

- With this protection method, it is necessary to install weep holes to allow the impoundment to drain completely.
- The impoundment shall be sized such that the volume of excavation is equal to or exceeds the runoff volume from the temporary control design storm (2-year, 24-hour) for the inlet's drainage area.
- The trap shall have a minimum depth of one foot and a maximum depth of 2 feet as measured from the top of the inlet and shall have side slopes of 2:1 or flatter.

- Block and Gravel Protection:
  - Block and gravel inlet protection is the most stable area inlet protection and can handle more concentrated flows. It may be installed on paved or vegetated surfaces. Loose stone shall be carefully removed from vegetated surfaces at the end of construction to prevent the stone from becoming a mowing hazard.
  - The inlet protection may be one or two blocks high. Single block heights are applicable for drainage areas up to 3 acres in size. The double block height shall be used for larger drainage areas.
  - Concrete blocks shall be standard 8 inch x 8 inch x 16 inch concrete masonry units and shall be in accordance with ASTM C139, Concrete Masonry Units for Construction. Filter gravel shall be ¾ inch washed stone containing no fines. Angular shaped stone is preferable to rounded shapes.
- Organic Filter Tube Protection:
  - Organic filter tubes may be used on paved or unpaved surfaces.
  - On paved surfaces, tubes shall be secured in place by rock bags. On unpaved surfaces, the tubes shall be embedded in the ground a minimum of 3 inches and staked at 4 foot spacing.
  - Designer shall provide calculations and specify the diameter of tube to be used based on the inlet's drainage area and the flow rate of runoff to the inlet. The minimum allowable diameter is 12 inches.

Proprietary Inlet Protection

- Numerous proprietary protection devices are available from commercial vendors. The devices often have the advantage of being reusable on several projects if they are maintained in good condition.
- It is the policy of this manual not to recommend any specific commercial vendors for proprietary controls. However, this subsection is included in order to provide municipalities with a rationale for approving the use of a proprietary inlet protection device within their jurisdiction.
- The designer shall work with the supplier to provide the municipality with flow calculations or independent third-party tests that document the device's performance for conditions similar to the ones in which it is proposed to be installed. The conditions that should be considered include: type and size of inlet, inlet configuration, size of contributing drainage area, design flow rate, soil particle sizes to be removed, and other pollutants to be removed.
- The designer or vendor of the proprietary device shall provide a minimum of three references for projects where the device has been installed and maintained in operation at a construction site for at least six months. Local references are preferred; but references from other regions can be accepted if a similarity between the reference project and the proposed application can be demonstrated.
- Proprietary devices must not completely block the inlet. The device shall have a minimum of a 2 inch wide opening for the length of the inlet when it will be used in areas that water can safely pond to depths deeper than the design depths for the inlet. If ponding is not an option, then the device must have overflow capacity equal to the inlet design flow rate.
- Some proprietary devices are available with replaceable pads or filters. These pads or filters have the added benefit or removing pollutants such as metals and oils in addition to removing sediment.

These types of inserts are recommended in applications where prior or current land use in or adjacent to the construction areas may result in the discharge of pollutants.

- Proprietary protection devices shall be in accordance with the General criteria at the beginning of this section and any criteria listed under Curb Inlet Protection and Area Inlet Protection that are not specific to an inlet protection method.

3.4.4 Design Guidance and Specifications

Specifications for construction of this item may be found in the Standard Specifications for Public Works Construction – North Central Texas Council of Governments, Section 201.15 Inlet Protection.

3.4.5 Inspection and Maintenance Requirements

Inlet protection should be inspected regularly (at least as often as required by the TPDES Construction General Permit). Inlet controls should also be inspected after every storm event to check for collapse into the inlet or other damages that may block flow in the inlet. In addition to routine inspection, inlet protection devices should be observed and monitored during larger storm events to verify that they are not ponding or diverting water in a manner that floods a roadway or damages property.

Floatable debris and other trash caught by the inlet protection should be removed after each storm event. Sediment should also be removed from curb inlet protection after each storm event because of the limited storage area associated with curb inlets.

Sediment collected at area inlet protection should be removed before it reaches half the height of the protection device. Sediment should be removed from inlets with excavated impoundment protection before the volume of the excavation is reduced by 50 percent. In addition, the weep holes should be checked and kept clear of blockage.

Concrete blocks, 2 inch x 4 inch boards, stakes, and other materials used to construct inlet protection should be checked for damaged and repaired or replaced if damaged.

When filter fabric or organic filter tubes are used, they should be cleaned or replaced when the material becomes clogged. For systems using filter stone, when the filter stone becomes clogged with sediment, the stones must be pulled away from the inlet and cleaned or replaced.

Because of the potential for inlet protection to divert runoff or cause localized flooding, remove inlet protection as soon as the drainage area contributing runoff to the inlet is stabilized. Ensure that all inlet protection devices are removed at the end of the construction.

3.4.6 Example Schematics

The following schematics are example applications of the construction control. They are intended to assist in understanding the control's design and function.

The schematics are **not for construction**. They may serve as a starting point for creating a construction detail, but they must be site adapted by the designer. In addition, dimensions and notes appropriate for the application must be added by the designer.

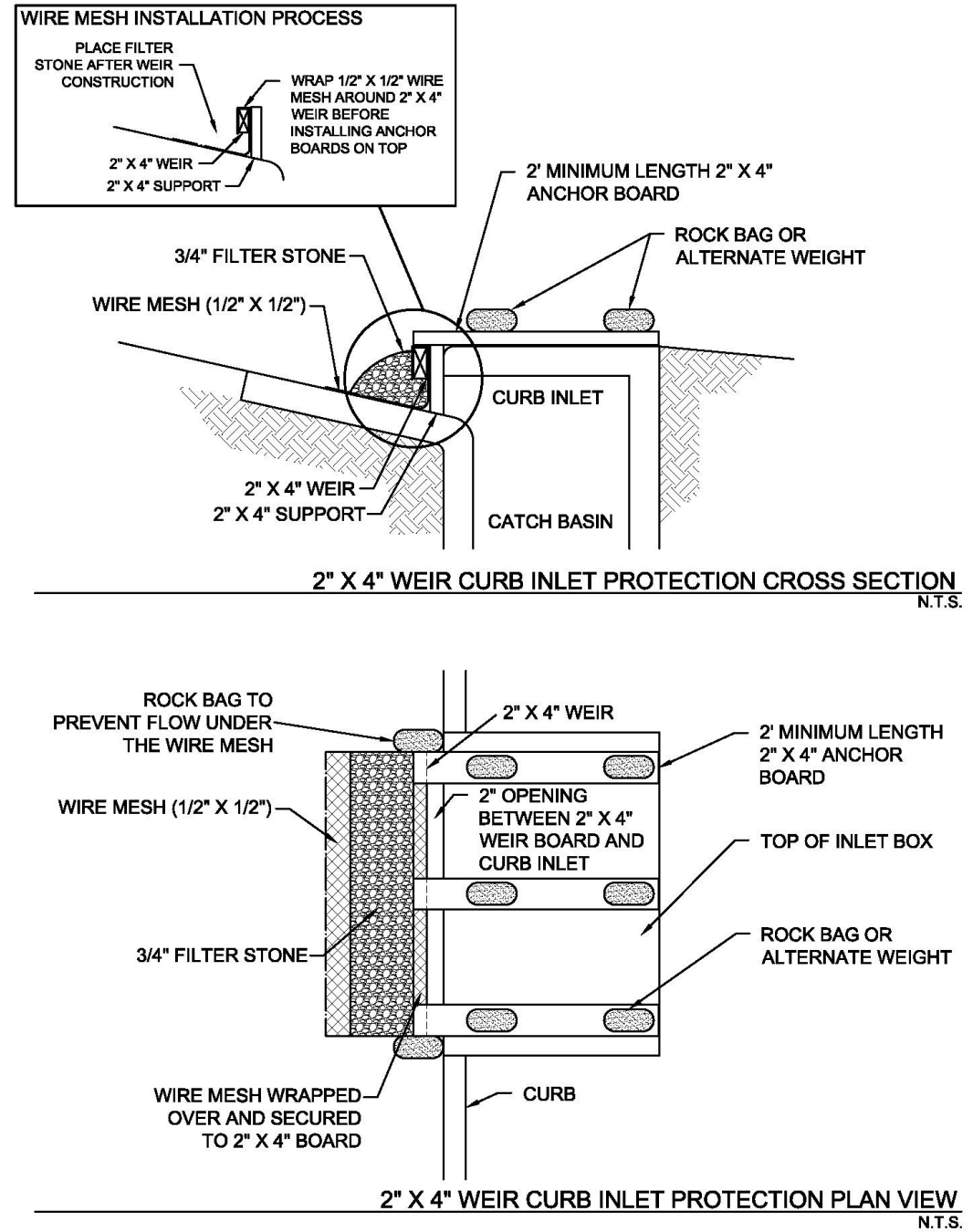

NOTE: THIS CONTROL WILL DECREASE THE CAPACITY OF THE INLET. IT SHALL ONLY BE USED WHEN AN ENGINEER HAS DETERMINED THERE IS ADEQUATE STORAGE OR POSITIVE OVERFLOW.

Figure 3.5 Schematics of 2"x4" Weir Curb Inlet Protection
(Source: Modified from Washington Suburban Sanitary Commission Detail SC-16.0)

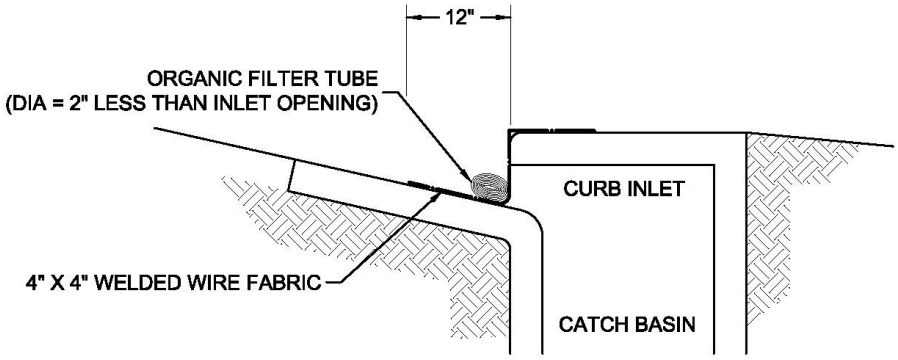

ORGANIC FILTER TUBE CURB INLET PROTECTION CROSS SECTION
N.T.S.

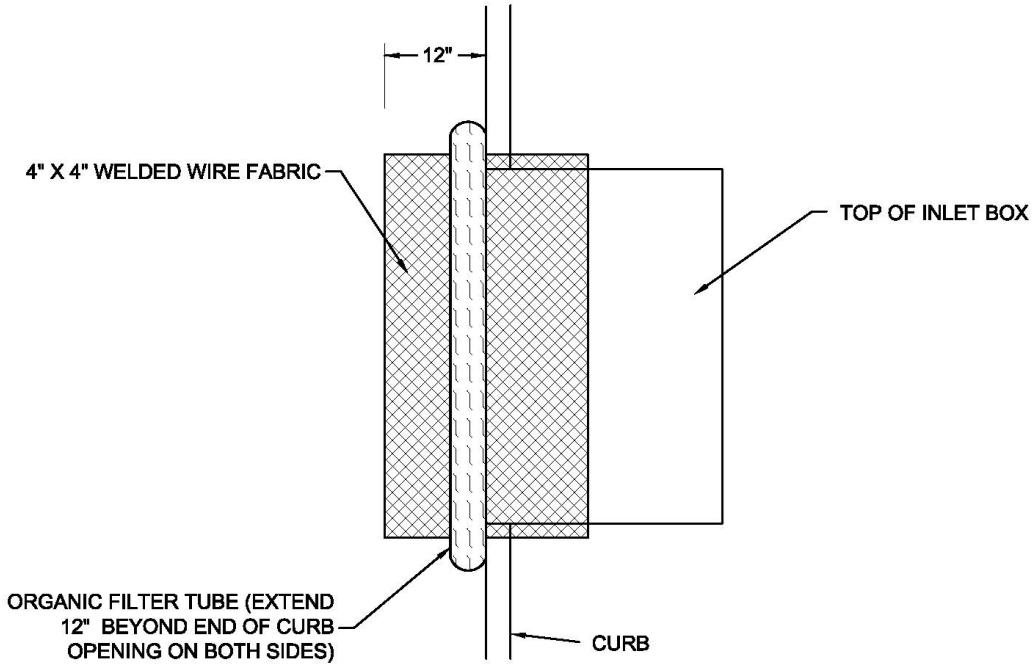

ORGANIC FILTER TUBE CURB INLET PROTECTION PLAN VIEW
N.T.S.

NOTE: THIS CONTROL WILL DECREASE THE CAPACITY OF THE INLET. IT SHALL ONLY BE USED WHEN AN ENGINEER HAS DETERMINED THERE IS ADEQUATE STORAGE OR POSITIVE OVERFLOW.

Figure 3.6 Schematics of Organic Filter Tube Curb Inlet Protection
(Source: Modified from City of Plano BMP SP-4)

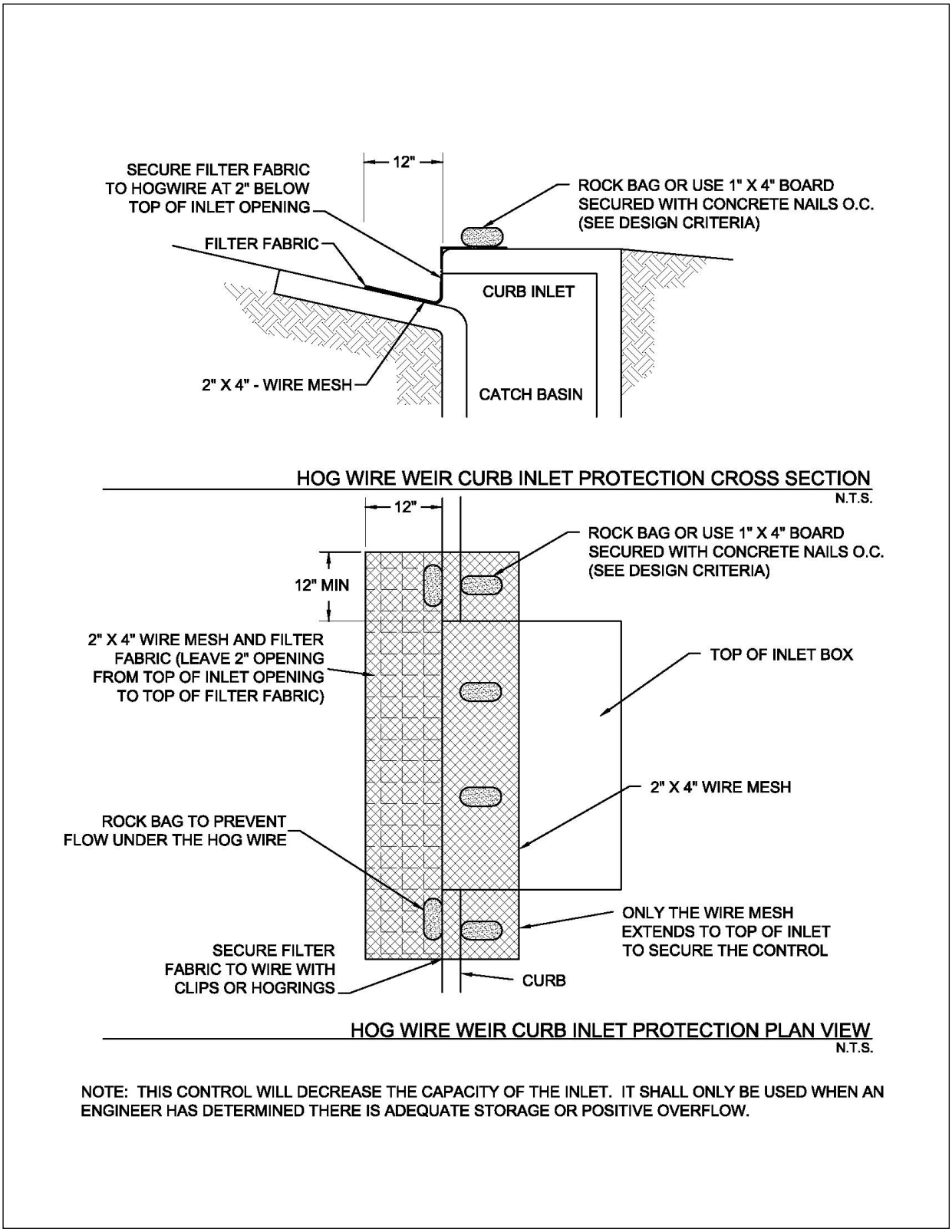

Figure 3.7 Schematics of Hog Wire Weir Curb Inlet Protection
(Source: Modified from City of Round Rock Detail E-03)

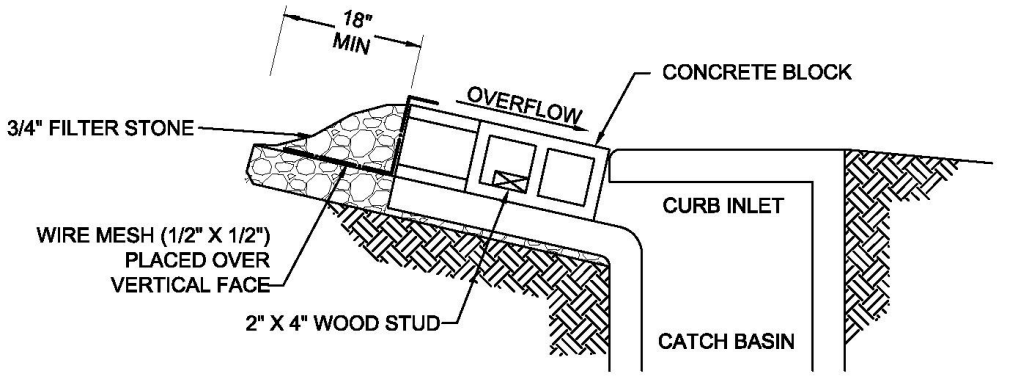

BLOCK AND GRAVEL FILTER CURB INLET PROTECTION CROSS SECTION

N.T.S.

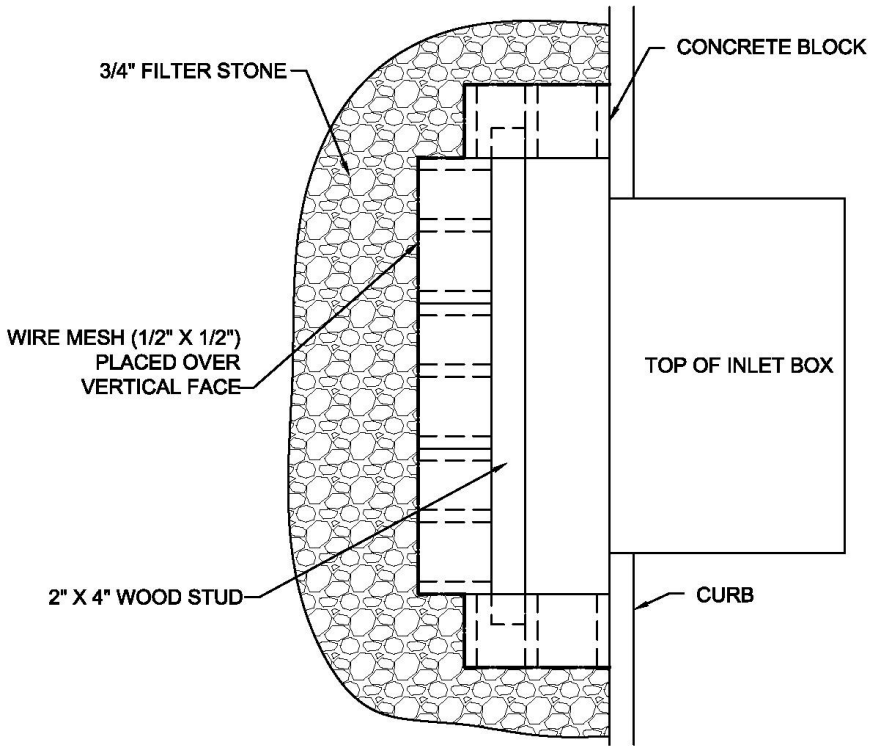

BLOCK AND GRAVEL FILTER CURB INLET PROTECTION PLAN VIEW

N.T.S.

NOTES:
1. DO NOT INSTALL ON INLETS IN A PUBLIC STREET OR OTHER ACTIVE TRAVEL LANE. BLOCK AND GRAVEL FILTER IS INTENDED FOR USE ON LOW POINT (SUMP) INLETS IN PARKING LOTS AND OTHER PAVEMENT THAT IS NOT AN ACTIVE TRAVEL LANE. THIS INLET PROTECTION METHOD ALLOWS FOR FULL USE OF THE INLET DESIGN CAPACITY.
2. INSTALL TRAFFIC CONES AS NEEDED TO MINIMIZE THE POTENTIAL FOR CARS HITTING THE BLOCK AND GRAVEL.

Figure 3.8 Schematics of Block and Gravel Filter Curb Inlet Protection

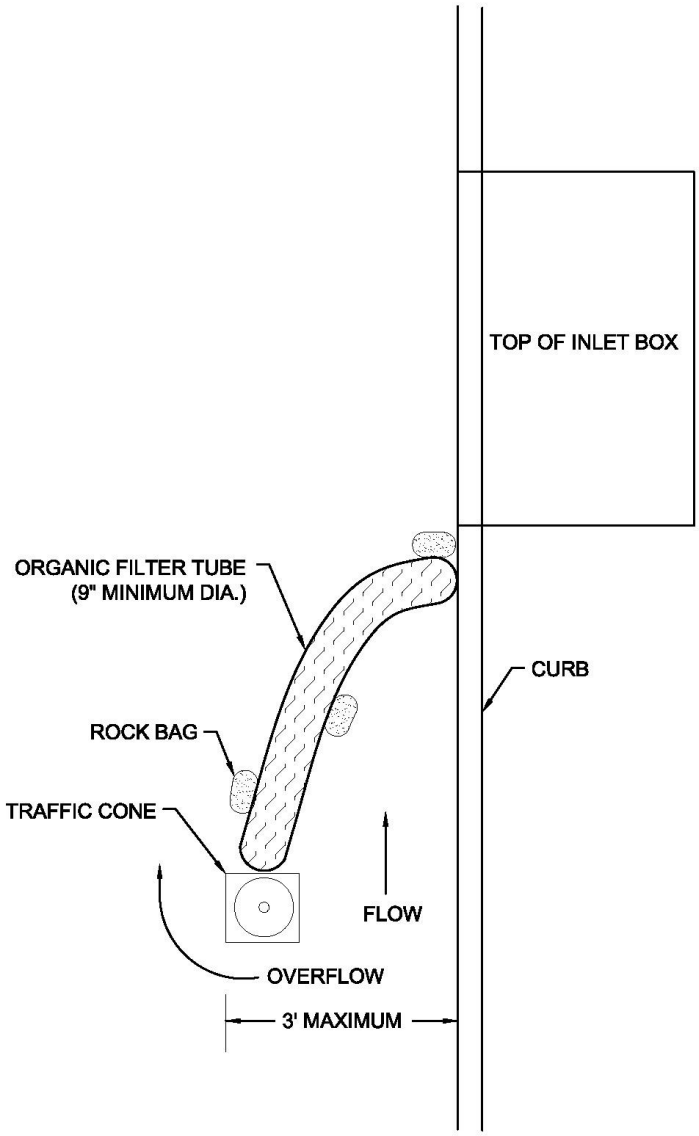

ORGANIC FILTER TUBE ON-GRADE CURB INLET PROTECTION DETAIL

N.T.S.

NOTES:
1. THIS DETAIL IS INTENDED FOR USE WITH ON-GRADE INLETS (NOT A LOW POINT) WHERE WATER WOULD BE DIVERTED INSTEAD OF PONDING BEHIND THE OTHER TYPES OF INLET PROTECTION.
2. DO NOT INSTALL ON INLETS WHERE THE ORGANIC FILTER TUBE WOULD EXTEND INTO AN ACTIVE TRAVEL LANE.

Figure 3.9 Schematic of Organic Filter Tube On-Grade Curb Inlet Protection

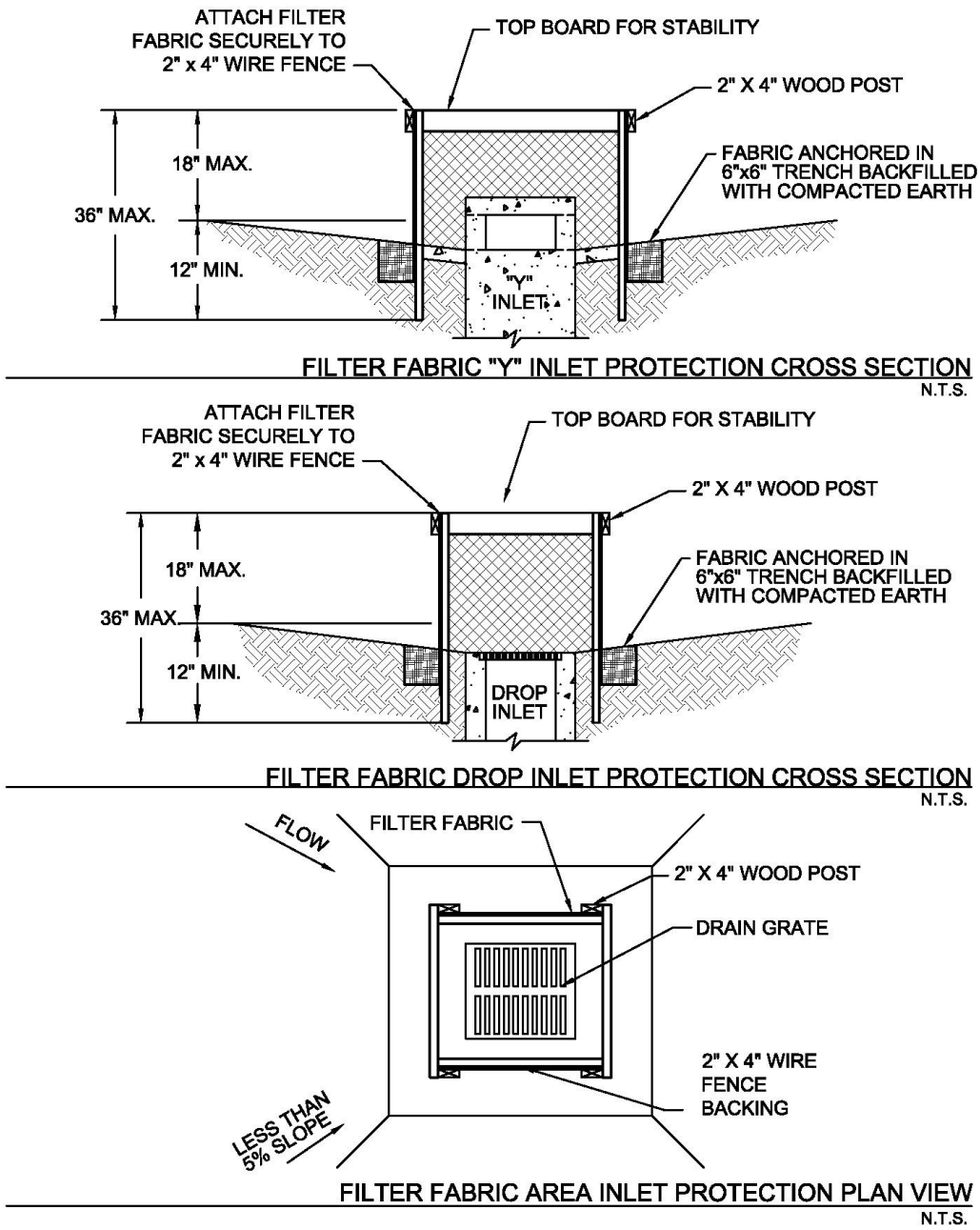

NOTES:
1. CONCENTRATED DITCH FLOW COMING FROM ONE OR MORE SIDES TOWARD THE INLET MAY REQUIRE A STONE OVERFLOW STRUCTURE TO BE CONSTRUCTED ON ONE SIDE OF THE INLET (SEE *SECTION 3.10 SILT FENCE*).
2. POSTS SHALL BE INSTALLED AT EACH CORNER AND BETWEEN CORNERS IF THE DISTANCE IS GREATER THAN 6' BETWEEN CORNER POSTS.

Figure 3.10 Schematics of Filter Fabric Area Inlet Protection
(Source: City of Plano BMP SP-4)

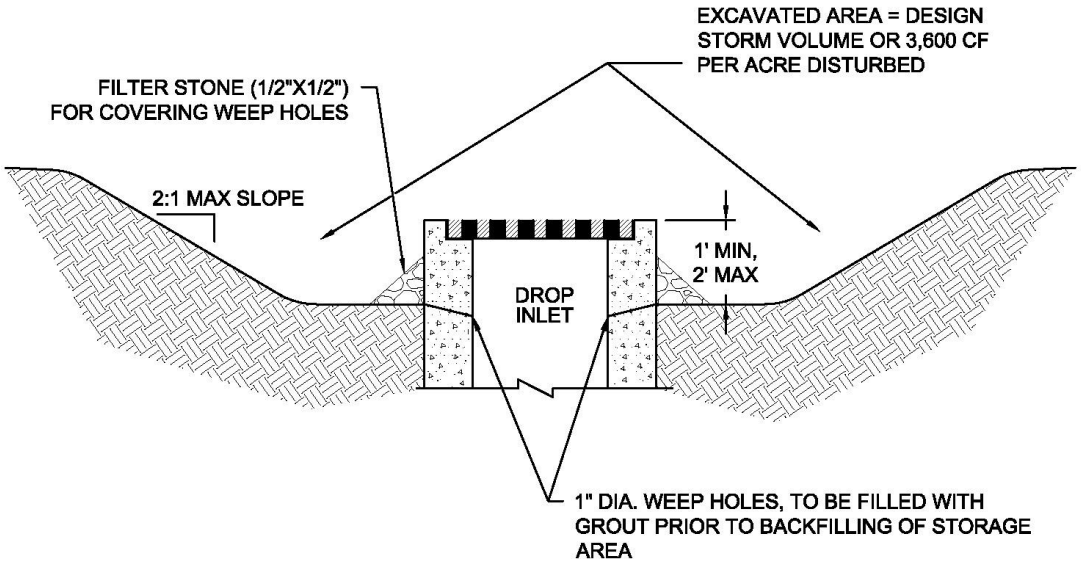

EXCAVATED IMPOUNDMENT DROP INLET PROTECTION CROSS SECTION

N.T.S.

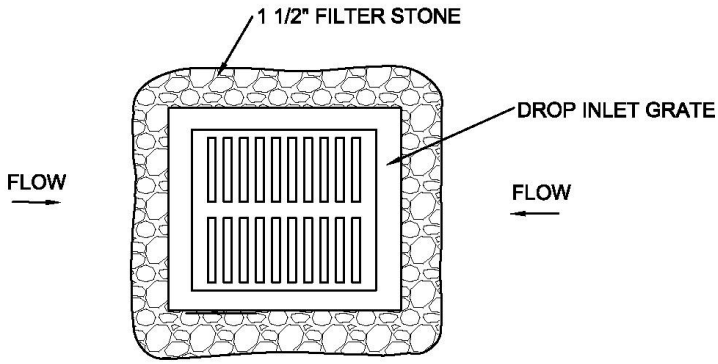

EXCAVATED IMPOUNDMENT AREA INLET PROTECTION PLAN VIEW

N.T.S.

Figure 3.11 Schematics of Excavated Impoundment Area Inlet Protection

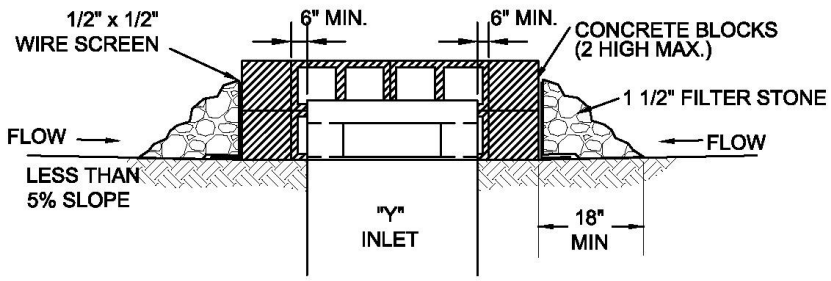

BLOCK AND GRAVEL "Y" INLET PROTECTION CROSS SECTION
N.T.S.

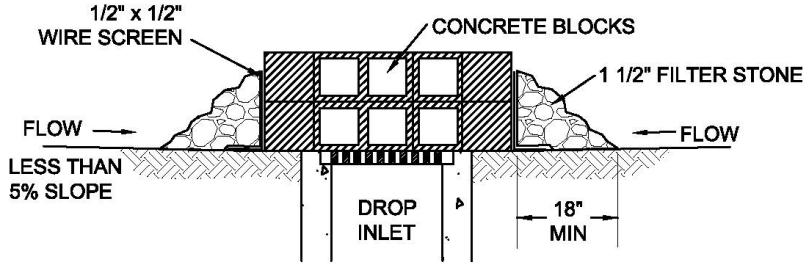

BLOCK AND GRAVEL DROP INLET PROTECTION CROSS SECTION
N.T.S.

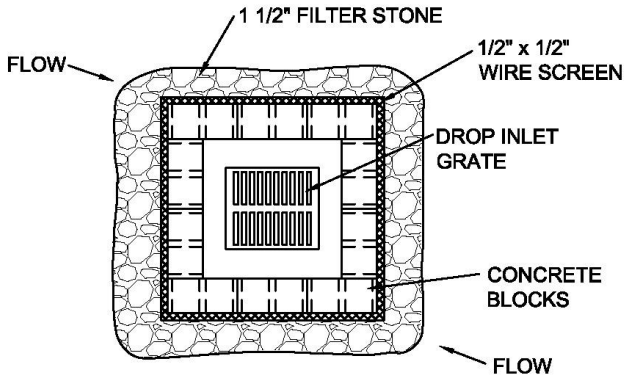

BLOCK AND GRAVEL AREA INLET PROTECTION PLAN VIEW
N.T.S.

Figure 3.12 Schematics of Block and Gravel Area Inlet Protection
(Source: Modified from City of Plano BMP SP-4)

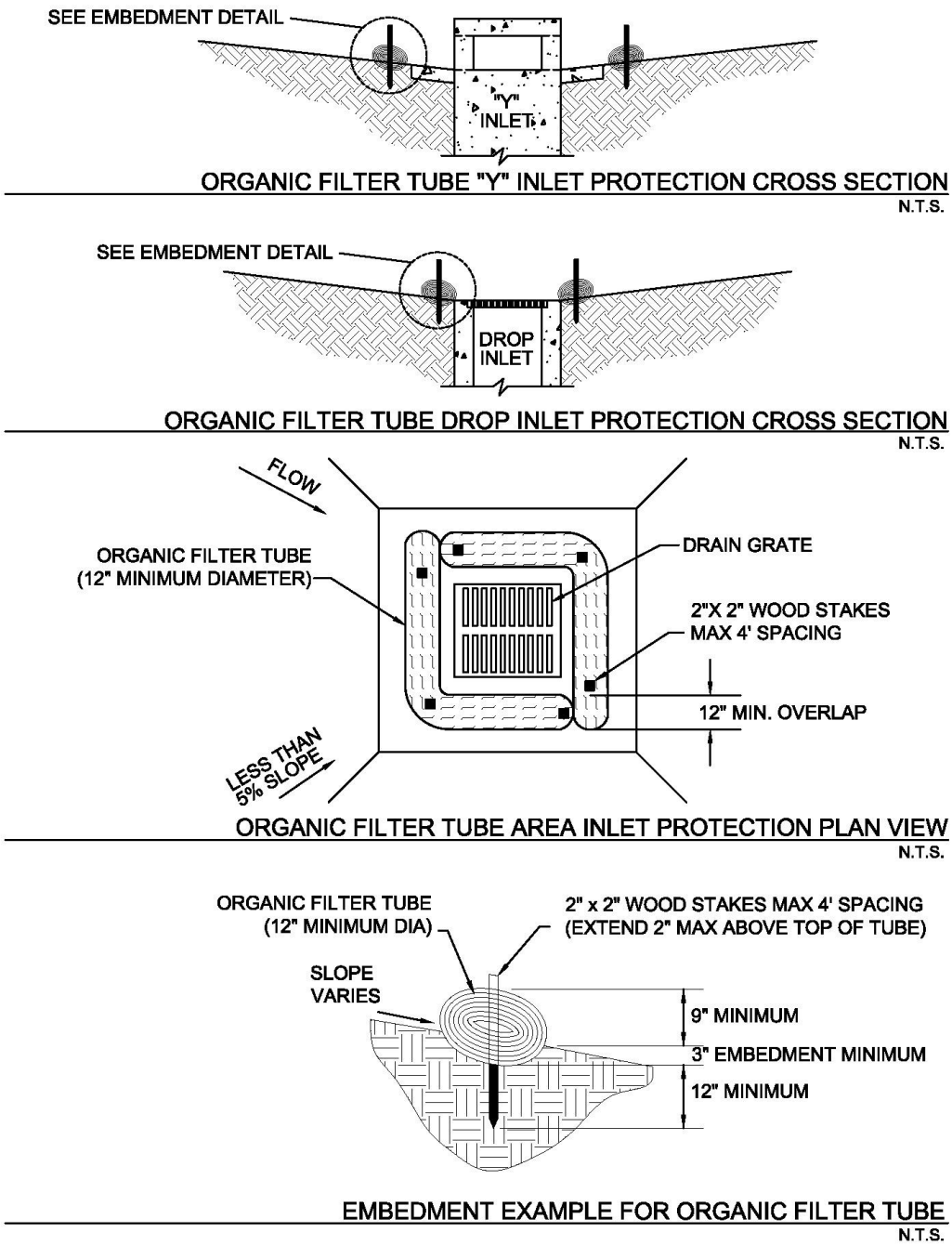

Figure 3.13 Schematics of Organic Filter Tube Area Inlet Protection

3.6 Organic Filter Tubes

Sediment Control

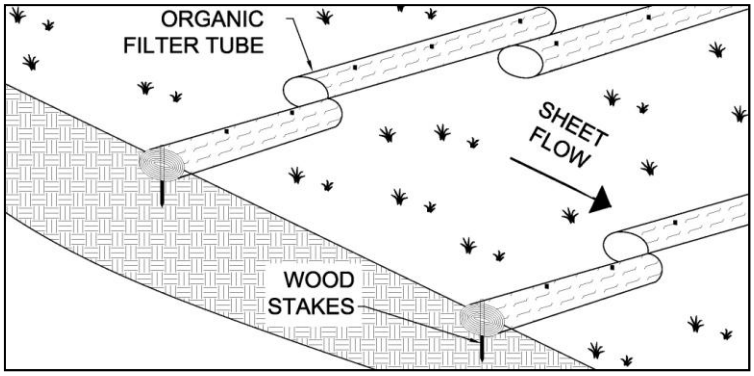

Description: Organic filter tubes are comprised of an open weave, mesh tube that is filled with a filter material (compost, wood chips, straw, coir, aspen fiber, or a mixture of materials). The tube may be constructed of geosynthetic material, plastic, or natural materials. Organic filter tubes are also called fiber rolls, fiber logs, wattles, mulch socks, and/or coir rolls. Filter tubes detain flow and capture sediment as linear controls along the contours of a slope or as a perimeter control down-slope of a disturbed area.

KEY CONSIDERATIONS

DESIGN CRITERIA:

- 9 inch minimum tube diameter when filled
- 3 inch minimum embedment in soil
- 18 inch minimum overlap at ends of tubes
- Spacing based on drainage area and slope
- Must be staked on soil and secured with rockbags on pavement
- Turn ends of tube lines upslope a minimum of 10 feet

ADVANTAGES / BENEFITS:

- Effective means to treat sheet flow over a short distance
- Relatively easy to install
- May be used on steep slopes
- Can provide perimeter control on paved surfaces or where soil type prevents embedment of other controls

DISADVANTAGES / LIMITATIONS:

- Difficult to remove when wet and/or filled with sediment
- Relatively small effective areas for sediment capture

MAINTENANCE REQUIREMENTS:

- Inspect regularly
- Repair eroded areas underneath the organic filter tubes
- Re-align and stake tubes that are dislodged by flow
- Remove sediment before it reaches half the height of the exposed tube

TARGETED POLLUTANTS

- ● Sediment
- ○ Nutrients & Toxic Materials
- ◒ Oil & Grease
- ○ Floatable Materials
- ○ Other Construction Wastes

APPLICATIONS

Perimeter Control
Slope Protection
Sediment Barrier

Channel Protection

Temporary Stabilization

Final Stabilization

Waste Management

Housekeeping Practices

Fe=0.50-0.75
(*Depends on soil type*)

IMPLEMENTATION CONSIDERATIONS

- ◒ Capital Costs
- ◒ Maintenance
- ○ Training
- ◒ Suitability for Slopes > 5%

Other Considerations:

- *None*

3.6.1 Primary Use

Organic filter tubes are long, flexible controls that are used along a line of constant elevation (along a contour) on slopes. They are used as perimeter controls down slope of disturbed areas and on side slopes where stormwater may runoff the area. The tubes maintain sheet flow, slow velocities, and capture sediment. When used on slopes, they also shorten the slope length and protect the slope from erosion.

3.6.2 Applications

Organic filter tubes include a wide variety of tube and filter materials. Organic filter tubes are used as a perimeter sediment barrier, similar to silt fence, for development projects and linear projects, such as roadways and utilities. They work well on individual residential lots and on lots being re-developed, where space may be limited. Organic filter tubes are most effective with coarse to silty soil types. Additional controls may be needed to remove fine silts and clay soils suspended in stormwater.

Organic filter tubes can be used on paved surfaces where it's not possible to stake a silt fence. Applications on paved surfaces include perimeter controls for soil stockpiles, pavement repair areas, utility trenching, and building demolition. When compost filter material is used in tubes on pavement, the material has the added benefit removing some oil and grease from stormwater runoff.

Applications on slopes include temporary sediment control during construction and erosion control of the disturbed soil on the slope. Organic filter tubes may be used to control sheet flow on slopes when final stabilization measures are being applied and established.

Organic filter tubes may also be used for inlet protection and, in limited cases, as check dams in small drainage swales. Refer to *Section 3.4 Inlet Protection* and *Section 2.1 Check Dam* for the design criteria to use organic filter tubes in these applications.

3.6.3 Design Criteria

General Criteria

- Filter tubes should be installed along the contour.
- Tubes shall be staked with 2 inch by 2 inch wooden stakes at a maximum spacing of 4 feet. Rebar or similar metal stakes may be used instead of wooden stakes.
- When placed on pavement, sand or rock bags shall be placed abutting the down-slope side of the tubes to prevent runoff from dislodging the tubes. At a minimum, bags shall be placed one foot from each end of the tube and at the middle of the tube.
- Filter tubes shall be embedded a minimum of three inches when placed on soil. Placement on rock shall be designed as placement on pavement.
- The end of tubes shall overlap a minimum of 18 inches when multiple tubes are connected to form a linear control along a contour or a perimeter.
- The last 10 feet (or more) at the ends of a line of tubes shall be turned upslope to prevent bypass by stormwater. Additional upslope lengths of tubes may be needed every 200 to 400 linear feet, depending on the traverse slope along the line of tubes.
- The most common sizes of tubes are 9 and 12 inch diameter; however, tubes are available in sizes up to 24 inch diameter. The designer shall specify a diameter based on the site application. Tubes less than 9 inches in diameter when filled shall not be used.
- Manufactured organic filter tube products shall have documentation of a minimum 75 percent soil retention using ASTM D7351 Standard Test Method for Determination of Sediment Retention Device Effectiveness in Sheet Flow Applications.

- When using manufactured tubes, the manufacturer's recommendations for diameter and spacing based on slope, flow velocities, and other site conditions shall be followed when they are more stringent than the design criteria in this section.
- When used as a perimeter control on grades of 10:1 or less, criteria in the following table shall be used as a guide for the size and installation rate of the organic filter tube.

Table 3.1 Perimeter Control Applications*

Drainage Area (Max)	*Max Flow Length to the Tube*	*Tube Diameter (Min)*
1/3 Acre per 100 feet	145 feet	18 inches
1/4 Acre per 100 feet	110 feet	15 inches
1/5 Acre per 100 feet	85 feet	12 inches
1/8 Acre per 100 feet	55 feet	9 inches

(Source: Modified and expanded from City of Plano Fact Sheet SP-13)
*Applicable on grades of 10:1 or flatter.

- When installing organic filter tubes along contours on slopes, criteria in the following table shall be used as a general guide for size and spacing of the tubes. Actual tube diameter and spacing shall be specified by the designer. The designer shall consider the tube manufacturers recommendations, the soil type, flow volume on the slope, required performance life, and erosion control measures that may be used in conjunction with the tubes.

Table 3.2 Maximum Spacing for Slope Protection

	Tube Diameter (Min)			
Slope (H:V)	*9 Inches*	*12 Inches*	*18 Inches*	*24 Inches*
5:1 to 10:1	35 feet	40 feet	55 feet	60 feet
4:1	30 feet	40 feet	50 feet	50 feet
3:1	25 feet	35 feet	40 feet	40 feet
2:1	20 feet	25 feet	30 feet	30 feet
1:1	10 feet	15 feet	20 feet	20 feet

(Source: Modified and expanded from Iowa Statewide Urban Design and Specifications Standards for Filter Socks)

Tube Material

- The designer shall specify the type of mesh based on the required life of the tube. At a minimum, the mesh shall have a rated life of one year under field conditions.
- If the tubes will be left onsite as part of the final stabilization, they must be constructed of 100 percent biodegradable jute, coir, sisal or similar natural fiber or 100 percent UV photodegradable plastic, polyester or geosynthetic material.
- Mesh tubes may be oval or round in cross-section.
- Mesh for the tubes shall be open and evenly woven. Size of weave openings shall be specified based on filter material. Openings may range from ½ inch for Erosion Control Compost to 2 inches for straw and coir.
- Mesh should not exceed ½ inch in diameter.

Filter Material

- Different filter materials have different properties and will affect sheet flow differently. The designer shall specify the type of material to be used (or excluded) on a particular site.
- Straw filter material shall be Certified Weed Free Forage. The straw must be in good condition, air-dried, and not rotten or moldy.

- Compost shall conform to the requirements for Erosion Control Compost in TxDOT Special Specification 1001 Compost (2004). Compost may provide some oil and grease removal; however, the large percentage of fines in compost will result in less filtering and more ponding of stormwater.
- Wood chips shall be 100 percent untreated chips and free of inorganic debris, such as plastic, glass, metal, etc. Wood chip size shall not be smaller than 1 inch and shall not exceed 3 inches in diameter. Shavings shall not be more than 5% of the total mass.

3.6.4 Design Guidance and Specifications

Specifications for Erosion Control Compost to be used as filter material may be found in Item 161 of the Standard Specifications for Construction and Maintenance of Highways, Streets, and Bridges (TxDOT 2004) and TxDOT Special Specification 1001 Compost (2004).

3.6.5 Inspection and Maintenance Requirements

Organic filter tubes should be inspected regularly (at least as often as required by the TPDES Construction General Permit). The filter tube should be checked to ensure that it is in continuous contact with the soil at the bottom of the embedment trench. Closely check for rill erosion that may develop under the filter tubes. Eroded spots must be repaired and monitored to prevent reoccurrence. If erosion under the tube continues, additional controls are needed.

Staking shall be checked to ensure that the filter tubes are not moving due to stormwater runoff. Repair and re-stake slumping filter tubes. Tubes that are split, torn or unraveling shall be repaired or replaced.

Check the filter tube material to make sure that it has not become clogged with sediment or debris. Clogged filter tubes usually lead to standing water behind the filter tube after the rain event. Sediment shall be removed from behind the filter tube before it reaches half the height of the exposed portion of the tube.

When sediment control is no longer needed on the site, the tubes may be split open and the filter material may be used for mulching during establishment of vegetation for final stabilization if it meets the criteria in *Section 2.5 Mulching*.

3.6.6 Example Schematics

The following schematics are example applications of the construction control. They are intended to assist in understanding the control's design and function.

The schematics are **not for construction**. They may serve as a starting point for creating a construction detail, but they must be site adapted by the designer. In addition, dimensions and notes appropriate for the application must be added by the designer.

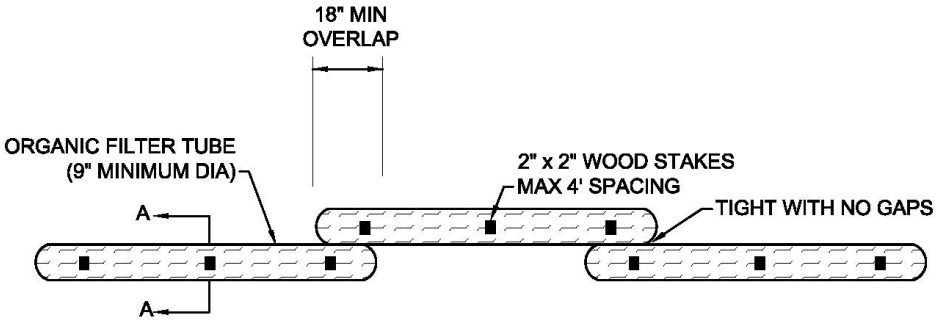

ORGANIC FILTER TUBE PERIMETER CONTROL PLAN VIEW
N.T.S.

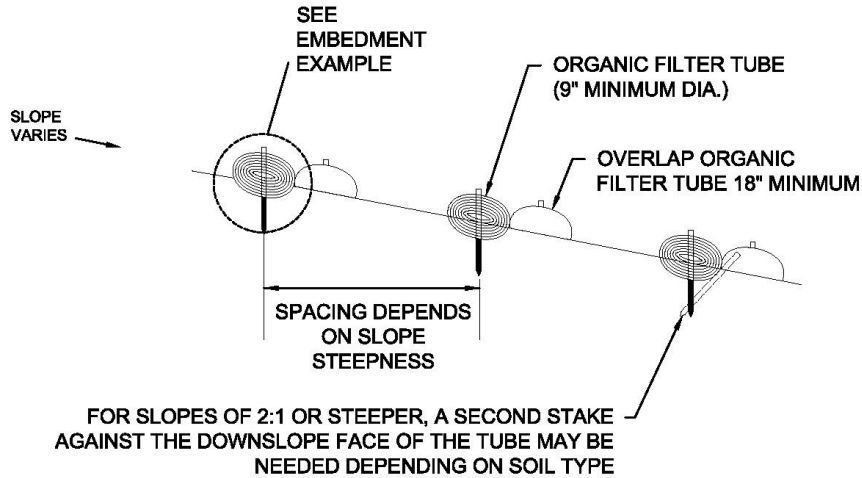

ORGANIC FILTER TUBE SLOPE PROTECTION PROFILE
N.T.S.

NOTES:

1. TYPE OF NETTING, FILTER MATERIAL, DIAMETER OF TUBE, AND SPACING OF TUBES SHALL BE SPECIFIED BY THE DESIGNER BASED ON THE FOLLOWING SITE PARAMETERS.
   - SIZE OF CONTRIBUTING DRAINAGE AREA
   - STEEPNESS OF SLOPE
   - GROUND CONDITIONS (SOIL OR PAVEMENT)
2. DESIGNER SHALL SHOW ON THE DRAWINGS THE LOCATIONS WHERE TUBES ARE TO BE TURNED UPSLOPE. UPSLOPE LENGTHS SHALL BE MINIMUM OF 10 FEET.

Figure 3.15 Schematics of Organic Filter Tubes

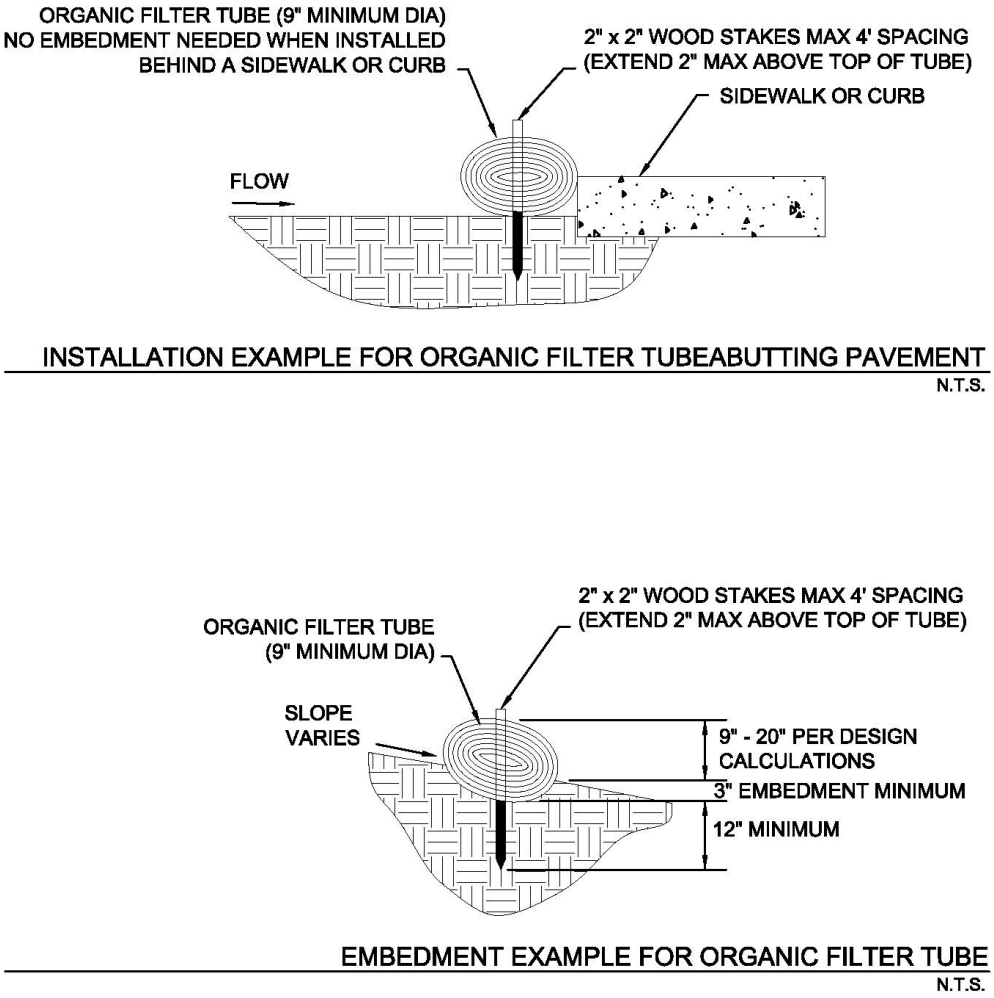

Figure 3.16 Examples of Organic Filter Tube Installation Methods

3.8 Pipe Inlet Sediment Trap

(Source: Modified from City of Plano BMP SP-11)

Sediment Control

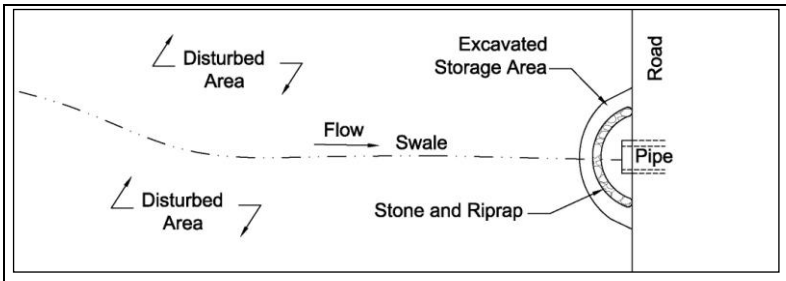

Description: The pipe inlet sediment trap is a barrier surrounding a pipe inlet to capture sediment before it enters a closed drainage system. The barrier may be made of concrete block and filter stone or stone riprap and filter stone. The barrier provides both filtration and detention for sediment to settle in the excavated area.

KEY CONSIDERATIONS

DESIGN CRITERIA:

- Top of control shall be no higher than half the pipe diameter
- Excavate a storage volume for the 2-year, 24-hour design storm upslope of the barrier
- Side slopes of 2:1 or flatter on the excavated storage area
- Maximum drainage area of 5 acres
- Overflow capability required for large storm events

ADVANTAGES / BENEFITS:

- Removes sediment before it enters a closed conveyance system

DISADVANTAGES / LIMITATIONS:

- Ponding upstream of the pipe inlet with localized flooding possible
- Type A Pipe Inlet Sediment Trap limited to pipes of 36 inches in diameter or less

MAINTENANCE REQUIREMENTS:

- Inspect regularly
- Remove trash and debris after each storm event
- Remove sediment from the sediment storage area before it reaches half the design depth
- If de-watering of the storage volume is not occurring, clean or replace the filter stone

TARGETED POLLUTANTS

- ● Sediment
- ○ Nutrients & Toxic Materials
- ○ Oil & Grease
- ◒ Floatable Materials
- ○ Other Construction Wastes

APPLICATIONS

- **Perimeter Control**
- **Slope Protection**
- **Sediment Barrier**
- **Channel Protection**
- **Temporary Stabilization**
- **Final Stabilization**
- **Waste Management**
- **Housekeeping Practices**

Fe=0.50-0.75

(*Depends on soil type*)

IMPLEMENTATION CONSIDERATIONS

- ◒ Capital Costs
- ◒ Maintenance
- ○ Training
- ● Suitability for Slopes > 5%

Other Considerations:

- *Re-grading and stabilization of the control area after construction*

3.8.1 Primary Use

The pipe inlet sediment trap is used to intercept and filter sediment from concentrated flows at the inlet to a pipe. Capturing sediment before it enters a closed conveyance system decreases the cost of cleaning and removing sediment from the system.

3.8.2 Applications

The pipe inlet sediment trap should be used where existing or proposed storm drain pipes or culverts are used prior to final stabilization of the area draining to the pipe inlet.

3.8.3 Design Criteria

- The pipe inlet sediment trap must be designed with overflow capability, since this control is used where pipe culverts collect relatively heavy concentrations of stormwater flows.
- The drainage area contributing runoff to the sediment trap shall be not larger than 5 acres.
- Type A pipe inlet sediment trap is limited to pipes of 36 inches diameter and smaller. Type B pipe inlet sediment trap should be used on larger pipes.
- A stormwater and sediment storage area shall be excavated upslope of the stone barrier. Minimum storage area volume should be the volume of runoff from the temporary control design storm (2-year, 24-hour). Caution should be exercised during excavation so as to not undermine the control structure or the pipe that is being protected.
- Side slopes surrounding the storage area shall be 2:1 or flatter.
- Top of stone and sediment storage created by the stone shall not be any higher than half of the inlet pipe diameter. On Type A Pipe Inlet Sediment Trap, the concrete blocks shall not be stacked any higher than two blocks high.
- Concrete blocks shall be standard 8”x8”x16” concrete masonry units and shall be in accordance with ASTM C139, Concrete Masonry Units for Construction.
- Wire fabric shall be a standard galvanized hardware fabric with ½ inch by ½ inch openings.
- Filter stone shall be nominal 1½ inch washed stone with no fines. Angular shaped stone is preferable to rounded shapes.
- Stone riprap shall be 6 inch to 12 inch well-graded stone, Dry Riprap, Type A.
- Riprap shall be placed on filter fabric meeting the following minimum criteria:
    - Tensile Strength, ASTM D4632 Test Method for Grab Breaking Load and Elongation of Geotextiles, 250-lbs.
    - Puncture Rating, ASTM D4833 Test Method for Index Puncture Resistance of Geotextiles, Geomembranes, and Related Products, 135-lbs.
    - Mullen Burst Rating, ASTM D3786 Standard Test Method for Hydraulic Bursting Strength of Textile Fabrics-Diaphragm Bursting Strength Tester Method, 420-psi.
    - Apparent Opening Size, ASTM D4751 Test Method for Determining Apparent Opening Size of a Geotextile, U.S. Sieve No. 20 (max).
- The pipe inlet sediment trap is most effective with coarse silt and sand soil particles. A passive treatment system may be used with the sediment trap to remove fine silt and clay soil particles.

3.8.4 Design Guidance and Specifications

Specifications for the riprap used in this item may be found in the Standard Specifications for Public Works Construction – North Central Texas Council of Governments, Section 803.3 Riprap.

3.8.5 Inspection and Maintenance Requirements

The pipe inlet sediment trap should be inspected regularly (at least as often as required by the TPDES Construction General Permit) to ensure that the device is functioning properly. The controls should also be checked after storm events to verify it's operating properly and to inspect for damages. Make repairs as needed.

Trash and debris should be removed from the trap after each storm event to prevent it from plugging the rock. Remove sediment from the storage area before the depth of sediment is half of the design depth. If the sediment storage area is not being de-watered, the filter stone surrounding the pipe inlet must be cleaned or replaced. Cleaning the filter stone surface the first few times by raking may be adequate. Repeated sediment build-up and clogging of the stone will require filter stone removal and replacement.

3.8.6 Example Schematics

The following schematics are example applications of the construction control. They are intended to assist in understanding the control's design and function.

The schematics are **not for construction**. They may serve as a starting point for creating a construction detail, but they must be site adapted by the designer. In addition, dimensions and notes appropriate for the application must be added by the designer.

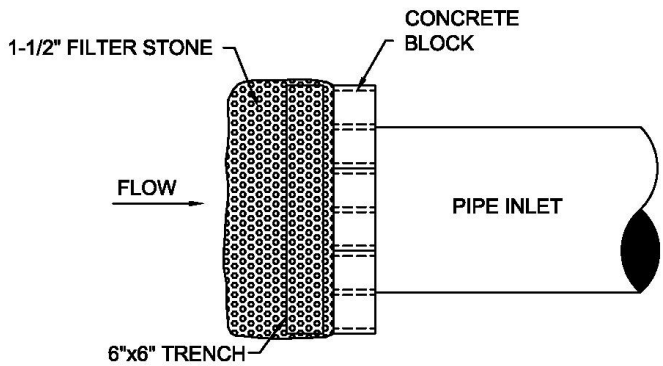

TYPE A PIPE INLET SEDIMENT TRAP PLAN VIEW
N.T.S.

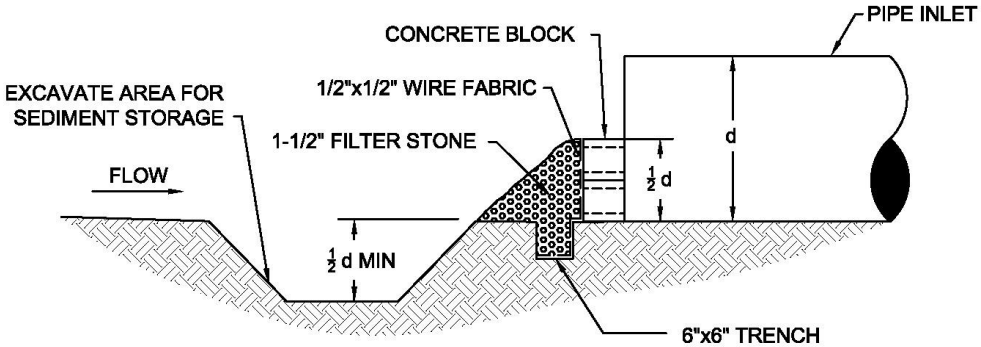

TYPE A PIPE INLET SEDIMENT TRAP CROSS SECTION
N.T.S.

NOTE: THE TYPE A CONTROL IS FOR USE ON PIPES WITH A DIAMETER EQUAL TO OR LESS THAN 36 INCHES.

Figure 3.17 Schematics of Type A Pipe Inlet Sediment Trap
(Source: Modified from City of Plano BMP SP-11)

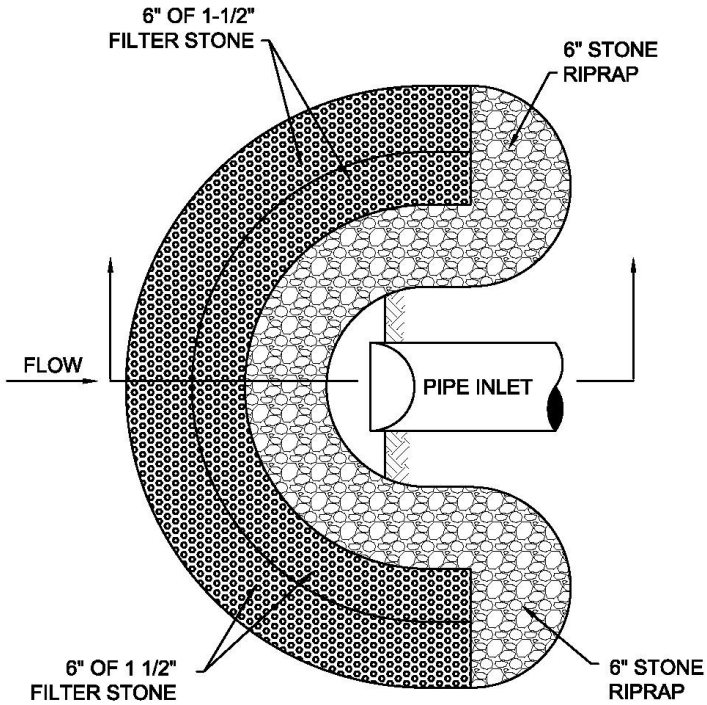

TYPE B PIPE INLET SEDIMENT TRAP PLAN VIEW
N.T.S.

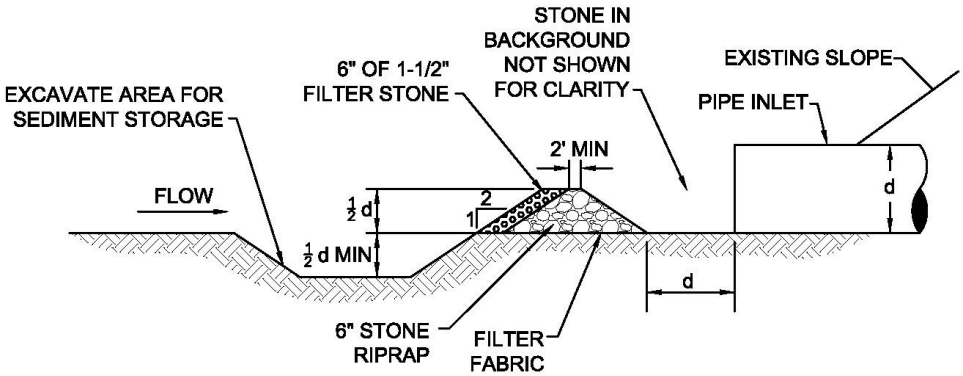

TYPE B PIPE INLET SEDIMENT TRAP CROSS SECTION
N.T.S.

NOTE: THE TYPE B CONTROL IS FOR USE ON PIPES WITH A DIAMETER GREATER THAN 36 INCHES.

Figure 3.18 Schematics of Type B Pipe Inlet Sediment Trap
(Source: Modified from City of Plano BMP SP-11)

3.10 Silt Fence

Sediment Control

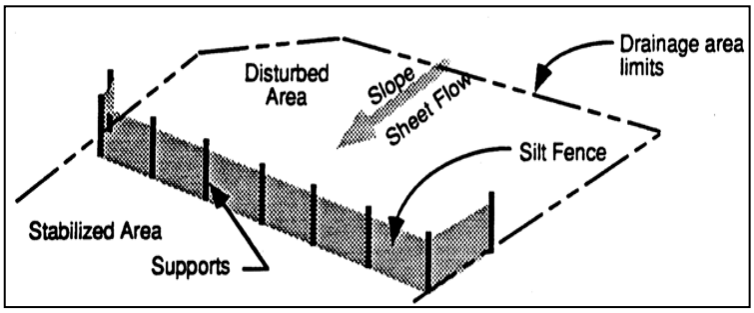

Description: A silt fence consists of geotextile fabric supported by wire mesh netting or other backing stretched between metal posts with the lower edge of the fabric securely embedded six-inches in the soil. The fence is typically located downstream of disturbed areas to intercept runoff in the form of sheet flow. A silt fence provides both filtration and time for sediment settling by reducing the velocity of the runoff.

KEY CONSIDERATIONS

DESIGN CRITERIA:

- Maximum drainage area of 0.25 acre per 100 linear feet of silt fence
- Maximum 200 feet distance of flow to silt fence; 50 feet if slope exceeds 10 percent
- Minimum fabric overlap of 3 feet at abutting ends; join fabric to prevent leakage
- Turn end of silt fence line upslope a minimum of 10 feet
- Install stone overflow structure at low points or spaced at approximately 300 feet if no apparent low point

ADVANTAGES / BENEFITS:

- Economical means to treat sheet flow
- Most effective with coarse to silty soil types

DISADVANTAGES / LIMITATIONS:

- Limited effectiveness with clay soils due to clogging
- Localized flooding due to minor ponding at the upslope side of the silt fence
- Not for use as check dams in swales or low areas subject to concentrated flow
- Not for use where soil conditions prevent a minimum toe-in depth of 6 inches or installation of support posts to a depth of 12 inches
- Can fail structurally under heavy storm flows, creating maintenance problems and reducing effectiveness

MAINTENANCE REQUIREMENTS:

- Inspect regularly
- Repair undercutting, sags and other fence failures
- Remove sediment before it reaches half the height of the fence
- Repair or replace damaged or clogged filter fabric

TARGETED POLLUTANTS

- ● Sediment
- ○ Nutrients & Toxic Materials
- ○ Oil & Grease
- ◒ Floatable Materials
- ○ Other Construction Wastes

APPLICATIONS

- **Perimeter Control**
- **Slope Protection**
- **Sediment Barrier**
- **Channel Protection**
- **Temporary Stabilization**
- **Final Stabilization**
- **Waste Management**
- **Housekeeping Practices**

Fe=0.50-0.75
(*Depends on soil type*)

IMPLEMENTATION CONSIDERATIONS

- ◒ Capital Costs
- ● Maintenance
- ○ Training
- ◒ Suitability for Slopes > 5%

Other Considerations:

- *Effects of ponding or the redirection of flow onto adjacent areas and property*

3.10.1 Primary Use

Silt fence is normally used as a perimeter control on the down slope side of disturbed areas and on side slopes where stormwater may runoff the area. It is only feasible for non-concentrated, sheet flow conditions. If it becomes necessary to place a silt fence where concentrated flows may be occur (e.g. where two silt fences join at an angle, or across minor channels or gullies), it will be necessary to reinforce the silt fence at that area by a rock berm or sand bag berm, or other structural measures that will support the silt fence.

3.10.2 Applications

Silt fence is an economical means to treat overland, non-concentrated flows for all types of projects. Silt fences are used as perimeter control devices for both site developers and linear (roadway) type projects. They are most effective with coarse to silty soil types. Due to the potential of clogging and limited effectiveness, silt fences should be used with caution in areas that have predominantly clay soil types. In this latter instance, a soils engineer or soil scientist should confirm the suitability of silt fence for that application. Additional controls may be needed to remove fine silts and clay soils suspended in stormwater.

3.10.3 Design Criteria

- Fences are to be constructed along a line of constant elevation (along a contour line) where possible.
- Silt fence can interfere with construction operations; therefore, planning of access routes onto the site is critical.
- Maximum drainage area shall be 0.25 acre per 100 linear feet of silt fence.
- Maximum flow to any 20 foot section of silt fence shall be 1 CFS.
- Maximum distance of flow to silt fence shall be 200 feet or less. If the slope exceeds 10 percent the flow distance shall be less than 50 feet.
- Maximum slope adjacent to the fence shall be 2:1.
- Silt fences shall not be used where there is a concentration of water in a channel, drainage ditch or swale, nor should it be used as a control on a pipe outfall.
- If 50 percent or less soil, by weight, passes the U.S. Standard Sieve No. 200; select the apparent opening size (A.O.S.) to retain 85percent of the soil.
- If 85 percent or more of soil by weight, passes the U.S. Standard Sieve No. 200, silt fences shall not be used unless the soil mass is evaluated and deemed suitable by a soil scientist or geotechnical engineer concerning the erodiblity of the soil mass, dispersive characteristics, and the potential grain-size characteristics of the material that is likely to be eroded.
- Stone overflow structures or other outlet control devices shall be installed at all low points along the fence or spaced at approximately 300 feet if there is no apparent low point.
- Filter stone for overflow structure shall be 1 ½ inches washed stone containing no fines. Angular shaped stone is preferable to rounded shapes.
- Silt fence fabric must meet the following minimum criteria:
    - Tensile Strength, ASTM D4632 Test Method for Grab Breaking Load and Elongation of Geotextiles, 90-lbs.
    - Puncture Rating, ASTM D4833 Test Method for Index Puncture Resistance of Geotextiles, Geomembranes, and Related Products, 60-lbs.
    - Mullen Burst Rating, ASTM D3786 Standard Test Method for Hydraulic Bursting Strength of Textile Fabrics-Diaphragm Bursting Strength Tester Method, 280-psi.

- Apparent Opening Size, ASTM D4751 Test Method for Determining Apparent Opening Size of a Geotextile, U.S. Sieve No. 30(max) to No. 100 (min).
- Ultraviolet Resistance, ASTM D4355 Standard Test Method for Deterioration of Geotextiles by Exposure to Light, Moisture, and Heat in a Xenon Arc Type Apparatus, Minimum 70 percent.

- Fence posts shall be steel and may be T-section or L-section, 1.3 pounds per linear foot minimum, and 4 feet in length minimum. Wood posts may be used depending on anticipated length of service and provided they are 4 feet in length minimum and have a nominal cross section of 2 inches by 4 inches for pine or 2 inches by 2 inches for hardwoods.
- Silt fence shall be supported by steel wire fence fabric as follows:
  - 4 inch x 4 inch mesh size, W1.4 /1.4, minimum 14 gauge wire fence fabric;
  - Hog wire, 12 gauge wire, small openings installed at bottom of silt fence;
  - Standard 2 inch x 2 inch chain link fence fabric; or
  - Other welded or woven steel fabrics consisting of equal or smaller spacing as that listed herein and appropriate gauge wire to provide support.
- Silt Fence shall consist of synthetic fabric supported by wire mesh and steel posts set a minimum of 1-foot depth and spaced not more than 6-feet on center.
- A 6 inch wide trench is to be cut 6 inches deep at the toe of the fence to allow the fabric to be laid below the surface and backfilled with compacted earth or gravel to prevent bypass of runoff under the fence. Fabric shall overlap at abutting ends a minimum of 3 feet and shall be joined such that no leakage or bypass occurs. If soil conditions prevent a minimum toe-in depth of 6 inches or installation of support post to depth of 12 inches, silt fences shall not be used.
- Sufficient room for the operation of sediment removal equipment shall be provided between the silt fence and other obstructions in order to properly maintain the fence.
- The last 10 feet (or more) at the ends of a line of silt fence shall be turned upslope to prevent bypass of stormwater. Additional upslope runs of silt fence may be needed every 200 to 400 linear feet, depending on the traverse slope along the line of silt fence.

3.10.4 Design Guidance and Specifications

Specifications for construction of this item may be found in the Standard Specifications for Public Works Construction – North Central Texas Council of Governments, Section 201.5 Silt Fence and in the Standard Specifications for Construction and Maintenance of Highways, Streets and Bridges (TxDot 2004) Item 506.2.J and Item 506.4.C.9.

The American Society for Testing and Materials has established standard specifications for silt fence materials (ASTM D6461) and silt fence installation (ASTM D6462).

3.10.5 Inspection and Maintenance Requirements

Silt fence should be inspected regularly (at least as often as required by the TPDES Construction General Permit) for buildup of excess sediment, undercutting, sags, and other failures. Sediment should be removed before it reaches half the height of the fence. In addition, determine the source of excess sediment and implement appropriate measures to control the erosion. Damaged or clogged fabric must be repaired or replaced as necessary.

3.10.6 Example Schematics

The following schematics are example applications of the construction control. They are intended to assist in understanding the control's design and function.

The schematics are **not for construction**. They may serve as a starting point for creating a construction detail, but they must be site adapted by the designer. In addition, dimensions and notes appropriate for the application must be added by the designer.

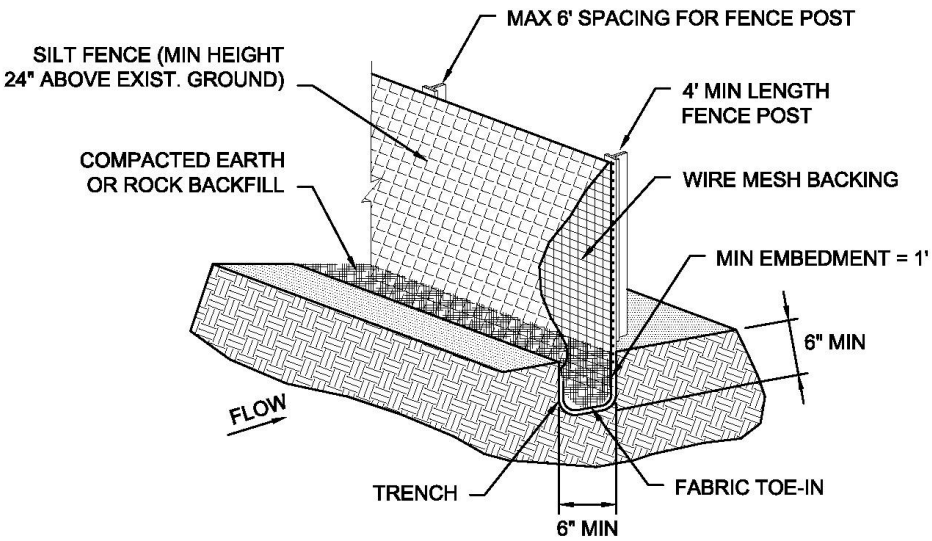

SILT FENCE EXAMPLE
N.T.S.

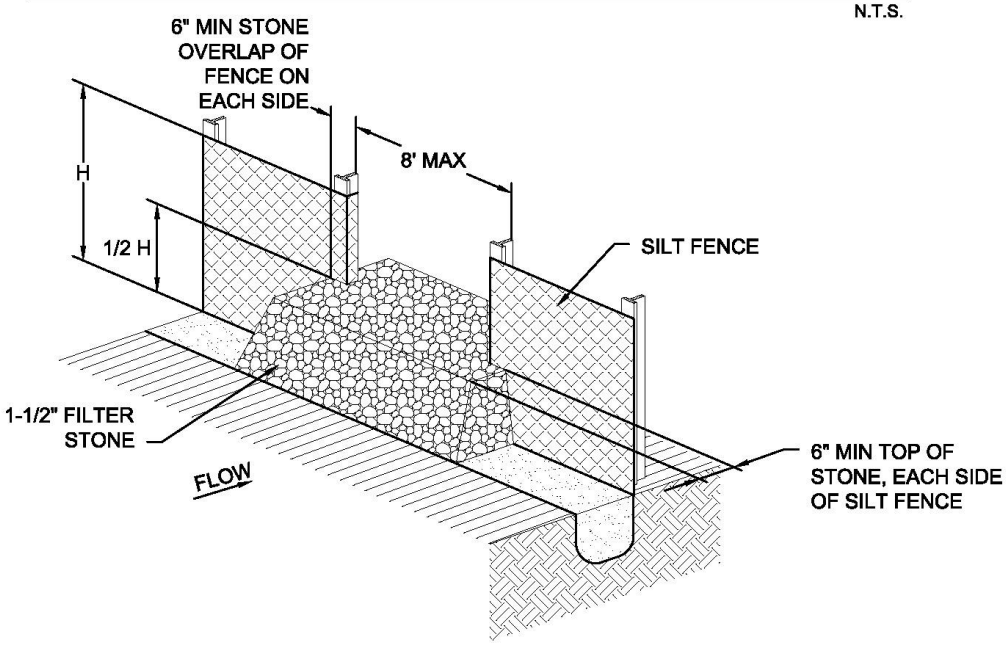

STONE OVERFLOW STRUCTURE EXAMPLE
N.T.S.

NOTES:
1. DESIGN SHALL SHOW ON THE DRAWINGS THE LOCATIONS WHERE OVERFLOW STRUCTURES SHALL BE INSTALLED. OVERFLOW STRUCTURES ARE REQUIRED AT ALL LOW POINTS AND AT A SPACING OF APPROXIMATELY 300 FT WHERE NO LOW POINT IS APPARENT.
2. DESIGNER SHALL ON THE DRAWINGS THE LOCATIONS WHERE SILT FENCE IS TO BE TURNED UPSLOPE. UPSLOPE LENGTHS SHALL BE A MINIMUM OF 10 FEET.

Figure 3.28 Schematics of Silt Fence

3.11 Stabilized Construction Exit

Sediment Control

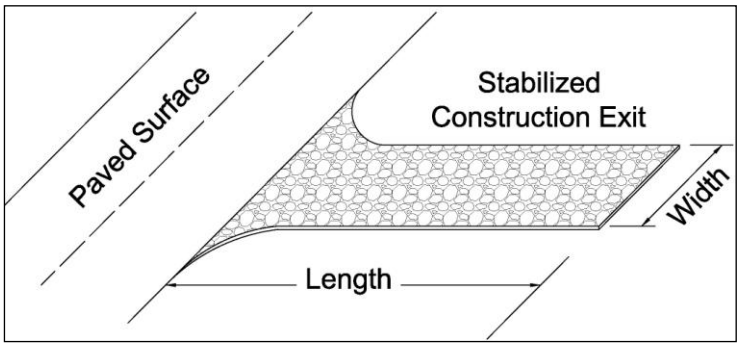

Description: A stabilized construction exit is a pad of crushed stone, recycled concrete or other rock material placed on geotextile filter cloth to dislodge soil and other debris from construction equipment and vehicle tires prior to exiting the construction site. The object is to minimize the tracking of soil onto public roadways where it will be suspended by stormwater runoff.

KEY CONSIDERATIONS

DESIGN CRITERIA:

- Slope exit away from offsite paved surface
- Minimum width and length dependent on size of disturbed area, which correlates to traffic volume
- 6 inches minimum thickness of stone layer
- Stone of 3 to 5 inches in size
- Add a wheel cleaning system when inspections reveal the stabilized exit does not prevent tracking

ADVANTAGES / BENEFITS:

- Reduces tracking of soil onto public streets
- Directs traffic to a controlled access point
- Protects other sediment controls by limiting the area disturbed

DISADVANTAGES / LIMITATIONS:

- Effectiveness dependent on limiting ingress and egress to the stabilized exit
- A wheel washing system may also be required to remove clay soil from tires, particularly in wet conditions

MAINTENANCE REQUIREMENTS:

- Inspect regularly
- Replace rock when sediment in the void area between the rocks is visible on the surface
- Periodically re-grade and top dress with additional stone to maintain efficiency

TARGETED POLLUTANTS

◒ Sediment

○ Nutrients & Toxic Materials

○ Oil & Grease

○ Floatable Materials

○ Other Construction Wastes

APPLICATIONS

Perimeter Control

Slope Protection

Sediment Barrier

Channel Protection

Temporary Stabilization

Final Stabilization

Waste Management

Housekeeping Practices

Fe=N/A

IMPLEMENTATION CONSIDERATIONS

◒ Capital Costs

◒ Maintenance

○ Training

○ Suitability for Slopes > 5%

Other Considerations:

- *None*

3.11.1 Primary Use

Stabilized construction exits are used to remove soil, mud and other matter from vehicles that drive off of a construction site onto public streets. Stabilized exits reduce the need to remove sediment from streets. When used properly, they also control traffic by directing vehicles a single (or two for larger sites) location. Controlling traffic onto and off of the site reduces the number and quantity of disturbed areas and provides protection for other sediment controls by decreasing the potential for vehicles to drive over the control.

3.11.2 Applications

Stabilized construction exits are used on all construction sites with a disturbed area of one acre or larger and are a recommended practice for smaller construction sites. A stabilized exit is used on individual residential lots until the driveway is placed. Stabilized construction exits may be used in conjunction with wheel cleaning systems as described in *Section 3.16 Wheel Cleaning Systems*.

3.11.3 Design Criteria

- Limit site access to one route during construction, if possible; two routes for linear and larger projects.
- Prevent traffic from avoiding or shortcutting the full length of the construction exit by installing barriers. Barriers may consist of silt fence, construction safety fencing, or similar barriers.
- Design the access point(s) to be at the upslope side of the construction site. Do not place construction access at the lowest point on the construction site.
- Stabilized construction exits are to be constructed such that drainage across the exit is directed to a controlled, stabilized outlet onsite with provisions for storage, proper filtration, and removal of wash water.
- The exit must be sloped away from the paved surface so that stormwater from the site does not discharge through the exit onto roadways.
- Minimum width of exit shall be 15 feet.
- The construction exit material shall be a minimum thickness of 6 inches. The stone or recycled concrete used shall be 3 to 5 inches in size with little or no fines.
- The geotextile fabric must meet the following minimum criteria:
    - Tensile Strength, ASTM D4632 Test Method for Grab Breaking Load and Elongation of Geotextiles, 300 lbs.
    - Puncture Strength, ASTM D4833 Test Method for Index Puncture Resistance of Geotextiles, Geomembranes, and Related Products, 120 lbs.
    - Mullen Burst Rating, ASTM D3786 Standard Test Method for Hydraulic Bursting Strength of Textile Fabrics-Diaphragm Bursting Strength Tester Method, 600 psi.
    - Apparent Opening Size, ASTM D4751 Test Method for Determining Apparent Opening Size of a Geotextile, U.S. Sieve No. 40 (max).
- Rock by itself may not be sufficient to remove clay soils from wheels, particularly in wet conditions. When necessary, vehicles must be cleaned to remove sediment prior to entering paved roads, streets, or parking lots. Refer to *Section 3.16 Wheel Cleaning Systems* for additional controls.
- Using water to wash sediment from streets is prohibited
- Minimum dimensions for the stabilized exit shall be as follows:

Table 3.9 Minimum Exit Dimensions

Disturbed Area	*Min. Width of Exit*	*Min. Length of Exit*
< 1 Acre	15 feet	20 feet
≥ 1 Acre but < 5 Acres	25 feet	50 feet
≥ 5 Acres	30 feet	50 feet

- If a wheel cleaning system is used, the width of the stabilized exit may be reduced to funnel traffic into the system. Refer to *Section 3.16 Wheel Cleaning*.

3.11.4 Design Guidance and Specifications

Specifications for construction of this item may be found in the Standard Specifications for Public Works Construction – North Central Texas Council of Governments, Section 201.10 Stabilized Construction Entrance and in the Standard Specifications for Construction and Maintenance of Highways, Streets and Bridges (TxDOT 2004) Item 506.2.E and Item 506.4.C.5.

3.11.5 Inspection and Maintenance Requirements

Construction exits should be inspected regularly (at least as often as required by the TPDES Construction General Permit). The stabilized construction exit shall be maintained in a condition that prevents tracking or flow of sediment onto paved surfaces. Periodic re-grading and top dressing with additional stone must be done to keep the efficiency of the exit from diminishing. The rock shall be re-graded when ruts appear. Additional rock shall be added when soil is showing through the rock surface.

Additional controls are needed if inspections reveal a properly installed and maintained exit, but tracking of soil outside the construction area is still evident. Additional controls may be daily sweeping of all soil spilled, dropped, or tracked onto public rights-of-way or the installation of a wheel cleaning system.

3.11.6 Example Schematics

The following schematics are example applications of the construction control. They are intended to assist in understanding the control's design and function.

The schematics are **not for construction**. They may serve as a starting point for creating a construction detail, but they must be site adapted by the designer. In addition, dimensions and notes appropriate for the application must be added by the designer.

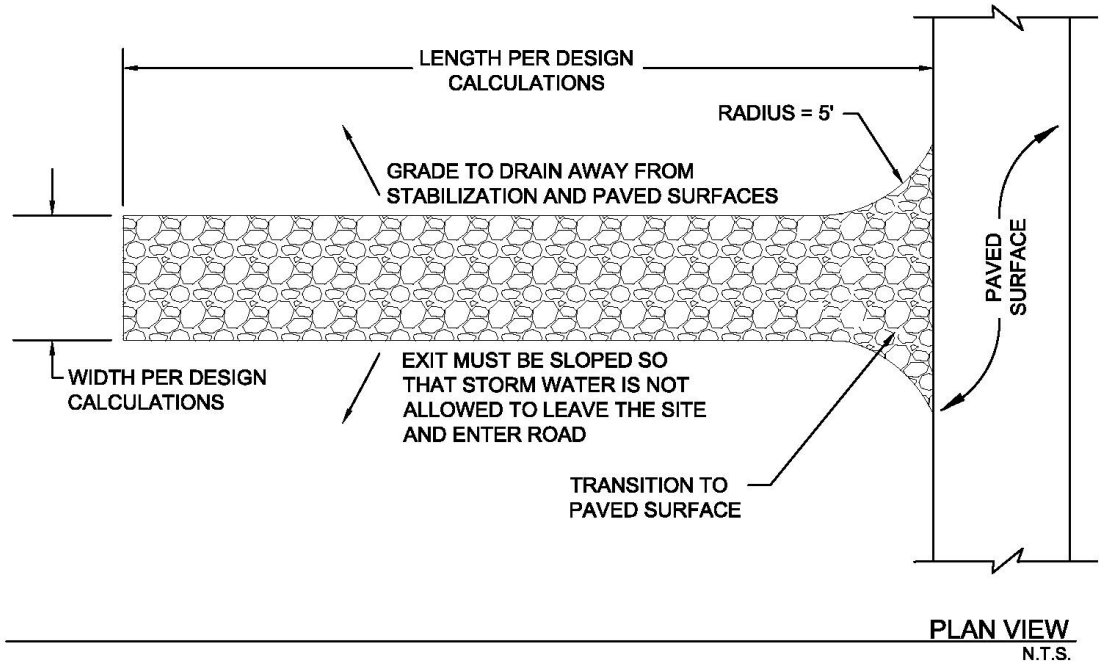

PLAN VIEW
N.T.S.

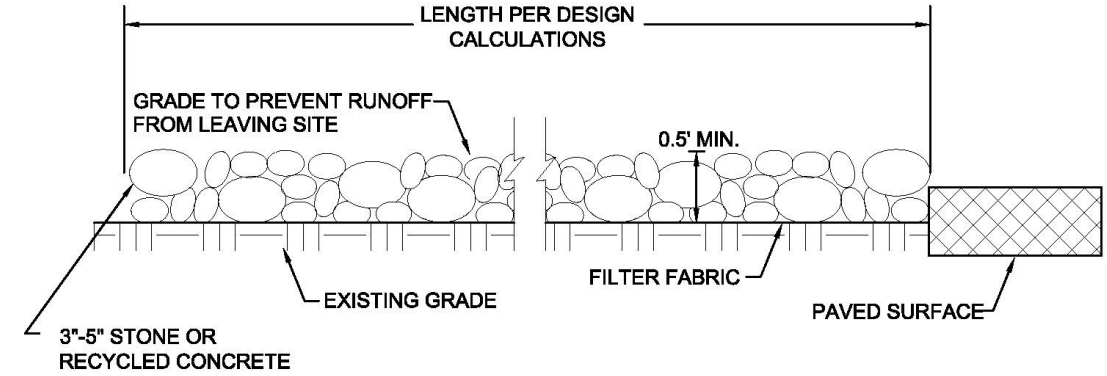

CROSS SECTION
N.T.S.

NOTE: INSTALL SILT FENCE, CONSTRUCTION SAFETY FENCING, OR SIMILAR BARRIER ALONG THE EXIT TO DIRECT TRAFFIC INTO THE EXIT.

Figure 3.29 Schematics of Stabilized Construction Exit

3.13 Triangular Sediment Filter Dike

Sediment Control

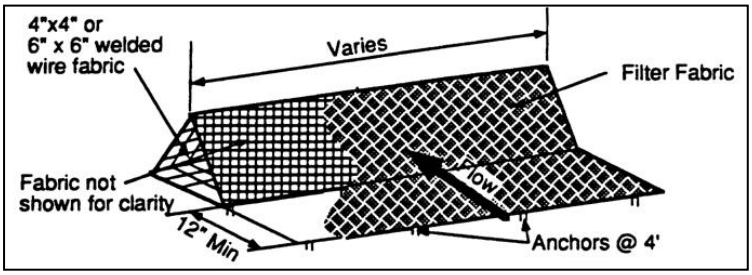

Description: A triangular sediment filter dike is a self-contained silt fence consisting of filter fabric wrapped around welded wire fabric and shaped into a triangular cross section. While similar in use to a silt fence, the dike is reusable, sturdier, transportable, and can be used on paved areas or in situations where it is impractical to install embedded posts for support.

KEY CONSIDERATIONS

DESIGN CRITERIA:

- Maximum drainage area of 0.25 acre per 100 linear feet of dike
- Maximum 200 feet distance of flow to filter dike; 50 feet if slope exceeds 10 percent
- Overlap ends of filter material 6 inches to cover dike-to-dike junction; secure with shoat rings

ADVANTAGES / BENEFITS:

- Can be installed on paved surfaces or where the soil type prevents embedment of other controls
- Withstands more concentrated flow and higher flow rates than silt fence

DISADVANTAGES / LIMITATIONS:

- Localized flooding due to minor ponding at the upslope side of the filter dike
- Not effective where there are substantial concentrated flows
- Not effective along contours due to the potential for flow concentration and overtopping

MAINTENANCE REQUIREMENTS:

- Inspect regularly
- Remove sediment before it reaches 6 inches in depth
- Clean or replace fabric if clogged
- Repair or replace dike when structural deficiencies are found

TARGETED POLLUTANTS

- ● Sediment
- ○ Nutrients & Toxic Materials
- ○ Oil & Grease
- ◒ Floatable Materials
- ○ Other Construction Wastes

APPLICATIONS

- **Perimeter Control**
- **Slope Protection**
- **Sediment Barrier**
- **Channel Protection**
- **Temporary Stabilization**
- **Final Stabilization**
- **Waste Management**
- **Housekeeping Practices**

Fe=0.50-0.75
(*Depends on soil type*)

IMPLEMENTATION CONSIDERATIONS

- ◒ Capital Costs
- ◒ Maintenance
- ○ Training
- ◒ Suitability for Slopes > 5%

Other Considerations:

- *Effects of ponding on adjacent areas and property*

3.13.1 Primary Use

Triangular filter dikes are used in place of silt fence, treating sediment flow at the perimeter of construction areas and at the perimeter of the site. Also, the dikes can serve as stream protection devices by preventing sediment from entering the streams or as check dams in small swales.

Triangular sediment filter dikes are especially useful for construction areas surrounded by pavement, where silt fence, filter berm, or other sediment control installations are impractical.

3.13.2 Applications

Triangular dikes are used to provide perimeter control by detaining sediment on a disturbed site with drainage that would otherwise flow onto adjacent properties. Triangular dikes function as sediment trapping devices when used in areas of sheet flow across disturbed areas or are placed along stream banks to prevent sediment-laden sheet flow from entering the stream. The dikes can be subjected to more concentrated flows and a higher flow rate than silt fence.

Dikes can be used on a variety of surfaces where other controls are not effective. They may be installed on paved surfaces and where the soil type prevents embedment of other sediment controls.

3.13.3 Design Criteria

- Dikes are to be installed along a line of constant elevation (along a contour line).
- Maximum drainage area shall be 0.25 acre per 100 linear feet of dike.
- Maximum flow to any 20 foot section of dike shall be 1 CFS.
- Maximum distance of flow to dike shall be 200 feet or less. If the slope exceeds 10 percent, the flow distance shall be less than 50 feet.
- Maximum slope adjacent to the dike shall be 2:1.
- If 50 percent or less of soil, by weight, passes the U.S. Standard Sieve No. 200, select the apparent opening size (A.O.S.) to retain 85 percent of the soil.
- If 85 percent or more of soil, by weight, passes the U.S. Standard Sieve No. 200, triangular sediment dike shall not be used due to clogging.
- The filter fabric shall meet the following minimum criteria:
    - Tensile Strength, ASTM D4632 Test Method for Grab Breaking Load and Elongation of Geotextiles 90-lbs.
    - Puncture Rating, ASTM D4833 Test Method for Index Puncture Resistance of Geotextiles, Geomembranes, and Related Products, 60-lbs.
    - Mullen Burst Rating, ASTM D3786 Standard Test Method for Hydraulic Bursting Strength of Textile Fabrics-Diaphragm Bursting Strength Tester Method, 280-psi.
    - Apparent Opening Size, ASTM D4751 Test Method for Determining Apparent Opening Size of a Geotextile, U.S. Siev No. 30 (max) to 100 (min).
    - Ultraviolet Resistance, ASTM D4355 Standard Test Method for Deterioration of Geotextiles by Exposure to Light, Moisture, and Heat in a Xenon Arc Type Apparatus, Minimum 70 percent.
- The internal support for the dike structure shall be 6-gauge 6 inch x 6 inch wire mesh or 6-guage 4 inch x 4 inch welded wire fabric folded into triangular form eighteen (18) inches on each side.
- Tie-in to the existing grade should be accomplished by:

  (i) embedding the fabric six-inches below the top of ground on the upslope side;

(ii) extending the fabric to form a 12 inch skirt on the upstream slope and covering it with 3 to 5 inches of 1½ inch washed filter stone; or

(iii) entrenching the base of the triangular dike four inches below ground.

For (ii) above, the skirt and the upslope portion of the triangular dike skeleton should be anchored by metal staples on two-foot centers, driven a minimum of six inches into the ground (except where crossing pavement or exposed limestone). When installed on pavement, the washed rock in option (ii) may be replaced by bags filled with 1½ inch washed filter stone placed at 4 foot spacing to anchor the end of the filter fabric to the pavement.

- Filter material shall lap over ends six (6) inches to cover dike-to-dike junction; each junction shall be secured by shoat rings. Where the dike is placed on pavement, two rock bags shall be used to anchor the overlap to the pavement. Additional bags shall be used as needed to ensure continuous contact with the pavement (no gaps).
- Sand bags or large rock should be used as ballast inside the triangular dike section to stabilize the dike against the effects of high flows.
- Sufficient room for the operation of sediment removal equipment shall be provided between the dike and other obstructions in order to properly remove sediment.
- The ends of the dike shall be turned upgrade to prevent bypass of stormwater.
- When used as a perimeter control on drainage areas larger than 0.5 acres, a stone overflow structure, similar to the one shown in *Section 3.10 Silt Fence*, may be necessary at low points to act as a controlled overflow point in order to prevent localized flooding and failure of the dike.
- If used as check dams in small swales (drainage areas less than 3 acres), the dikes shall be installed according to the spacing and other criteria in *Section 2.1 Check Dam*.

3.13.4 Design Guidance and Specifications

Specifications for construction of this item may be found in the Standard Specifications for Public Works Construction – North Central Texas Council of Governments, Section 201.8 Triangular Sediment Filter Dike.

3.13.5 Inspection and Maintenance Requirements

Triangular sediment filter dikes should be inspected regularly (at least as often as required by the TPDES Construction General Permit). Sediment should be removed before it reaches 6 inches in depth. If the fabric becomes clogged, it should be cleaned or, if necessary, replaced. If structural deficiencies are found, the dike should be immediately repaired or replaced.

The integrity of the filter fabric is important to the effectiveness of the dike. Overlap between dike sections must be checked on a regular basis and repaired if deficient.

3.13.6 Example Schematics

The following schematics are example applications of the construction control. They are intended to assist in understanding the control's design and function.

The schematics are **not for construction**. They may serve as a starting point for creating a construction detail, but they must be site adapted by the designer. In addition, dimensions and notes appropriate for the application must be added by the designer.

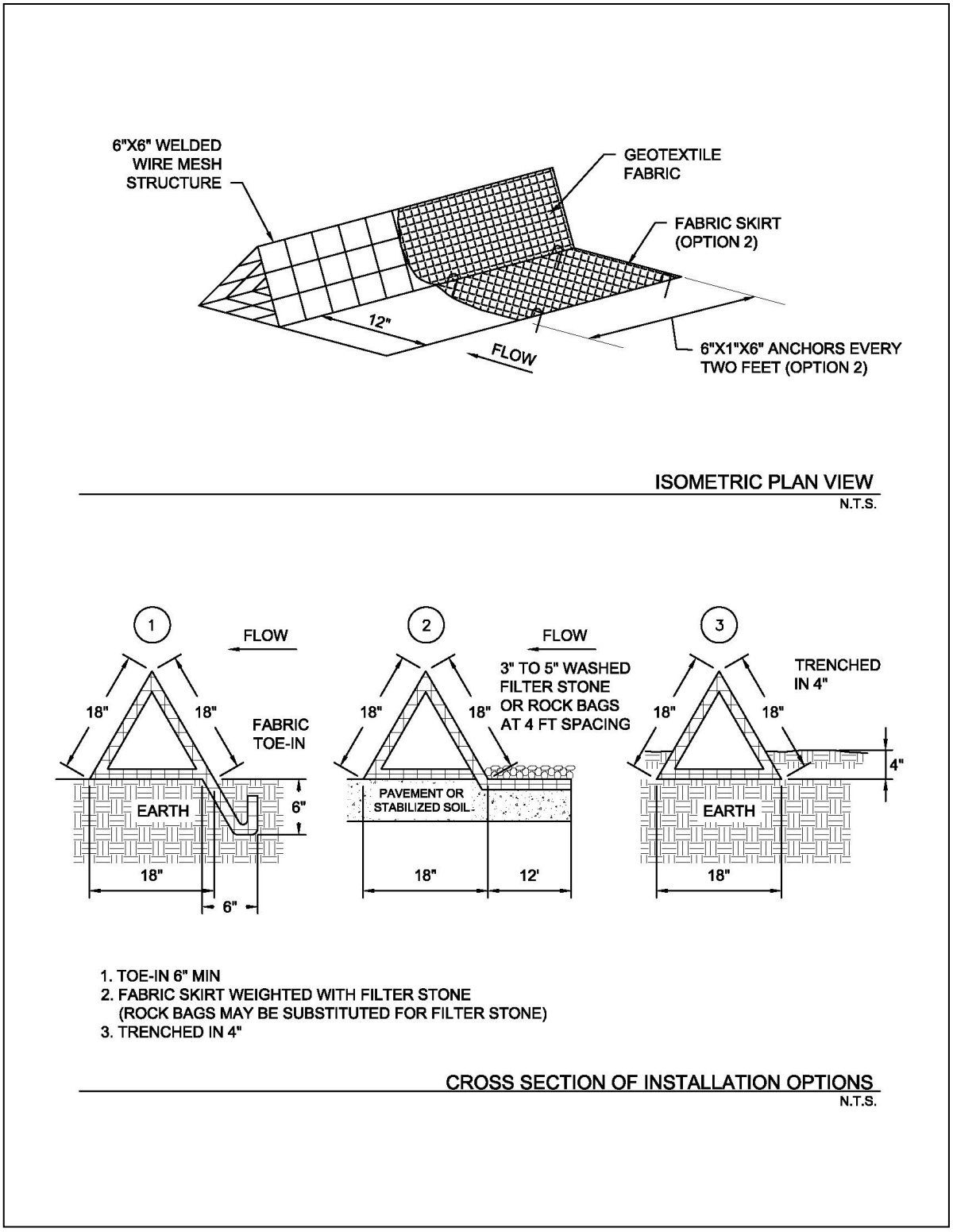

Figure 3.32 Schematics of Triangular Sediment Filter Dike

4.0 Material and Waste Controls

4.1 Chemical Management

Material and Waste Control

Description: Chemical management addresses the potential for stormwater to be polluted with chemical materials and wastes that are used or stored on a construction site. The objective of chemical management is to minimize the potential of stormwater contamination by construction chemicals through appropriate recognition, handling, storage, and disposal practices.

KEY CONSIDERATIONS

DESIGN CRITERIA:

- Designate a person responsible for chemical management
- Minimize the amount of chemicals and waste stored onsite
- Provide secondary containment that's 110 percent of the largest container in the containment
- Label all containers
- Prohibit the discharge of washout water
- Train workers in proper procedures
- Provide timely removal of waste materials

LIMITATIONS:

- Not intended to address site-assessment and pre-existing contamination
- Does not address demolition activities and potential pre-existing materials, such as lead and asbestos
- Does not address contaminated soils
- Does not address spill and leak response procedures
- Does not address chemicals associated with vehicle and equipment management

MAINTENANCE REQUIREMENTS:

- Inspect regularly
- Check for proper storage and evidence of leaks and spills
- Make sure all containers are labeled
- Check waste containers and dispose of the waste when 90 percent full
- Verify procedures are being followed
- Train new employees and regularly re-train all employees

TARGETED POLLUTANTS

○ Sediment

● Nutrients & Toxic Materials

● Oil & Grease

○ Floatable Materials

● Other Construction Wastes

APPLICATIONS

Perimeter Control

Slope Protection

Sediment Barrier

Channel Protection

Temporary Stabilization

Final Stabilization

Waste Management

Housekeeping Practices

IMPLEMENTATION CONSIDERATIONS

◒ Capital Costs

◒ Maintenance

● Training

○ Suitability for Slopes > 5%

Other Considerations:

- *TCEQ regulations for hazardous waste*

4.1.1 Primary Use

These management practices, along with applicable OSHA, EPA, and TCEQ requirements, are implemented at construction sites to prevent chemicals, hazardous materials, and their wastes from becoming stormwater pollutants.

4.1.2 Applications

Chemical management is applicable on all construction sites where chemicals and hazardous materials are stored or used and could result in pollutants being discharged with stormwater. Many chemicals, such as paints, grease, concrete curing compounds, and pesticide are present at most construction sites. Chemical management is most effective when used in conjunction with controls in *Section 4.8 Spill and Leak Response Procedures*.

Management of vehicle and equipment maintenance chemicals is applicable to all construction activities. These chemicals are the most common ones on construction sites; plus, there are specific stormwater permit requirements for vehicle and equipment maintenance. For these reasons, the management of chemicals associated with vehicles and equipment are found in *Section 4.10 Vehicle and Equipment Maintenance*.

Chemical management techniques are based on proper recognition, handling, and disposal practices by construction workers and supervisors. Key elements are education and modification of workers' behavior and provisions for safe storage and disposal. Cooperation and vigilance is required on the part of supervisors and workers to ensure that the procedures are followed.

The following list (not all inclusive) gives examples of targeted chemicals:

- Paints
- Solvents
- Stains
- Wood preservatives
- Cutting oils
- Greases
- Roofing tar
- Pesticides, herbicides, & fertilizers
- Concrete curing compound

It is not the intent of chemical management to supersede or replace normal site assessment and remediation procedures. Significant spills and/or contamination warrant immediate response by trained professionals. Chemical management shall be applied in combination with criteria in *Section 4.8 Spill and Leak Response Procedures*.

4.1.3 Design Criteria

- Construction plan notes shall require controls for all chemicals, hazardous materials, and their wastes that are potentially exposed to precipitation or stormwater runoff.
- Show the location of chemical and hazardous waste storage and secondary containment on the drawings, or require the contractor to add this information.
- The contractor should be required to designate a site superintendent, foreman, safety officer, or other senior person who is onsite daily to be responsible for implementing chemical management.
- Specify use of the least hazardous chemical to perform a task when alternatives are available. To the extent possible, do not use chemicals that are classified as hazardous materials or that will generate

a hazardous waste. A hazardous material is any compound, mixture, solution, or substance containing a chemical listed on the EPA's *Consolidated List of Chemicals Subject to the Emergency Planning and Community Right-to-Know Act (EPCRA) and Section 112(r) of the Clean Air Act* (EPA 550-B-01-003, October 2001), available at:

http://www.epa.gov/ceppo/pubs/title3.pdf

Chemical and Hazardous Material Storage

- As much as possible, minimize the exposure of building materials, building products, landscape materials, fertilizers, pesticides, herbicides, detergents, and other materials to precipitation and stormwater runoff.
- Chemicals and hazardous materials shall be stored in their original, manufacturers' containers, inside a shelter that prevents contact with rainfall and runoff.
- The amount of chemicals and hazardous materials stored onsite shall be minimized and limited to the materials necessary for the current phase of construction.
- Material Safety and Data Sheets (MSDSs) shall be available for all chemicals used or stored onsite.
- Chemical and hazardous materials shall be stored a minimum of 50 feet away from inlets, swales, drainage ways, channels, and other waters, if the site configuration provides sufficient space to do so. In no case shall material and waste sources be closer than 20 feet from inlets, swales, drainage ways, channels, and other waters.
- Use secondary containment controls for all hazardous materials. Containment shall be a minimum size of 110 percent of the largest chemical container stored within the containment.
- If an earthen pit or berm is used for secondary containment, it shall be lined with plastic or other material that is compatible with the chemical being stored.
- Chemical and hazardous material storage shall be in accordance with Federal and State of Texas regulations and with the municipality's fire codes.
- Storage locations shall have appropriate placards for emergency responders.
- Containers shall be kept closed except when materials are added or removed.
- Chemicals shall be dispensed using drip pans or within a lined, bermed area or using other spill/overflow protection measures.

Washout Procedures

- Many chemicals (e.g. stucco, paint, form release oils, curing compounds) used during construction may require washing of applicators or containers after use. The discharge of this wash water is prohibited.
- Wash water shall be collected in containers, labeled, and classified for correct waste disposal.
- A licensed waste hauler shall be used for wash water.

Chemical and Hazardous Waste Handling

- Ensure that adequate waste storage volume is available.
- Ensure that waste collection containers are conveniently located and compatible with the waste chemicals.
- Waste containers shall have lids and be emptied or hauled for disposal when they are 90 percent full or more frequently.
- Segregate potentially hazardous waste from non-hazardous construction waste and debris.

- Do not mix different chemical wastes. First, dangerous reactions may result. Second, all of the waste will be classified as the most hazardous waste in the container and will increase disposal costs.
- Clearly label all chemical and hazardous waste containers to identify which wastes are to be placed in each container.
- Based on information in the Material Safety Data Sheet, ensure that proper spill containment material is available onsite and maintained near the storage area.
- Do not allow potentially hazardous waste to be stored on the site for more than 90 days.
- Enforce hazardous waste handling and disposal procedures.

Disposal Procedures

- Regularly schedule waste removal to minimize onsite storage.
- Use only licensed waste haulers.
- For special and hazardous wastes, use licensed hazardous waste transporter that can classify, manifest and transport the special or hazardous wastes for disposal.
- Where possible, send wastes such as used oil to a recycler instead of a disposal facility.
- No chemical waste shall be buried, burned or otherwise disposed of onsite.

Education

- Instruct workers on safe chemical storage and disposal procedures.
- Instruct workers in identification of chemical pollutants and proper methods to contain them during storage and use.
- Educate workers of potential dangers to humans and the environment from chemical pollutants.
- Educate all workers on chemical storage and disposal procedures.
- Have regular meetings to discuss and reinforce identification, handling and disposal procedures (incorporate in regular safety seminars).
- Establish a program to train new employees.

Quality Control

- Designated personnel shall monitor onsite chemical storage, use, and disposal procedures.
- Educate and if necessary, discipline workers who violate procedures.
- Retain trip reports and manifests that document the recycling or disposal location for all chemical, special, and hazardous wastes that all hauled from the site.

4.1.4 Design Guidance and Specifications

National guidance for response procedures are established by the Environmental Protection Agency (EPA) in the Code of Federal Regulations (CFR). Specific sections addressing spills are governed by:

- 40 CFR Part 261 Identification and Listing of Hazardous Waste.
- 40 CFR Part 262 Standards Applicable to Generators of Hazardous Waste.
- 40 CFR Part 263 Standards Applicable to Transporters of Hazardous Waste.
- 49 CFR Parts 171-178 of the Transportation Hazardous Materials Regulations.

Guidance for storing, labeling, and managing hazardous waste in the State of Texas are established by the Texas Commission on Environmental Quality (TCEQ) in the Texas Administrative Code Title 30, Chapter 335, Industrial Solid Waste and Municipal Hazardous Waste.

No specification for chemical management measures is currently available in the Standard Specifications for Public Works Construction – North Central Texas Council of Governments.

4.1.5 Inspection and Maintenance Requirements

Chemical management measures should be inspected regularly (at least as often as required by the TPDES Construction General Permit) for proper storage and evidence of leaks or spills. Check that all chemicals, hazardous materials, and wastes are properly stored and labeled. If not stored properly, take corrective action, and reinforce procedures through re-education of employees.

If leaks or spills have occurred, check that proper clean up and reporting procedures have been followed. If procedures have not been followed, take corrective action. Check that all employees have been trained in spill and leak procedures as detailed in *Section 4.8 Spill and Leak Response Procedure*.

4.2 Concrete Sawcutting Waste Management

Waste Control

Description: Sawcutting of concrete pavement is a routine practice used to control shrinkage cracking immediately following placement of plastic concrete. It is also used to remove curb sections and pavement sections for pavement repairs, utility trenches, and driveways. Sawcutting for joints involves sawing a narrow, shallow grove in the concrete, while sawcutting for removals is usually done full depth through the slab. Water is used to control saw blade temperature and to flush the detritus from the sawed groove. The objective of concrete sawcutting waste management is to prevent the resulting slurry of process water and fine particles with its high pH from becoming a water pollutant.

KEY CONSIDERATIONS

DESIGN CRITERIA:

- Prohibit discharge of untreated slurry
- Educate employees on proper procedures
- Continuously vacuum slurry and cuttings during sawcutting operation
- Block inlets to prevent discharges
- Establish an onsite containment area (minimum 1 ft freeboard) if immediate disposal of the vacuumed slurry is not feasible
- Water evaporation and concrete recycling are the recommended disposal methods when slurry is not vacuumed

LIMITATIONS:

- Only one part of concrete waste management
- Does not address concrete demolition waste

MAINTENANCE REQUIREMENTS:

- Check for uncollected slurry after all sawcutting operations
- Inspect collection areas and repair containment as needed
- Dispose of sediment and cuttings when collection area volume is reduced by 50 percent
- Train new employees and regularly re-train all employees

TARGETED POLLUTANTS

○ Sediment
● Nutrients & Toxic Materials
○ Oil & Grease
○ Floatable Materials
● Other Construction Wastes

APPLICATIONS

Perimeter Control
Slope Protection
Sediment Barrier
Channel Protection
Temporary Stabilization
Final Stabilization
Waste Management
Housekeeping Practices

IMPLEMENTATION CONSIDERATIONS

○ Capital Costs
◒ Maintenance
● Training
○ Suitability for Slopes > 5%

Other Considerations:

- *Coordinate with concrete waste management*

4.2.1 Primary Use

Pavement sawcutting is performed on almost all construction projects that include removal or installation of pavement. Properly managing the slurry and cuttings from sawcutting prevents them from affecting surface and ground water resources.

4.2.2 Applications

Concrete sawcutting waste management is applicable on construction activities where sawcutting is part of the work, regardless of the size of the total area disturbed. It is also applicable on repair and maintenance projects that may not be required to implement erosion and sediment controls.

Concrete sawcutting waste management is based on the proper collection and disposal of the slurry and cuttings. Employee education is critical to ensuring correct procedures are followed.

4.2.3 Design Criteria

- Construction plan notes shall include proper concrete sawcutting waste management procedures.
- The contractor should be required to designate the site superintendent, foreman, or other person who is responsible for concrete sawcutting to also be responsible for concrete sawcutting waste management.

Slurry Collection

- During sawcutting operations, the slurry and cuttings shall be continuously vacuumed or otherwise recovered and not be allowed to discharge from the site.
- If the pavement to be cut is near a storm drain inlet, the inlet shall be blocked by sandbags or equivalent temporary measures to prevent the slurry from entering the inlet. Remove the sandbags immediately after completing sawcutting operations, so they do not cause drainage problems during storm events.
- The slurry and cuttings shall not be allowed to remain on the pavement to dry out.

Slurry Disposal

- Develop pre-determined, safe slurry disposal areas.
- Collected slurry and cuttings should be immediately hauled from the site for disposal at a waste facility. If this is not possible, the slurry and cuttings shall be discharged into onsite containment.
- The onsite containment may be an excavated or bermed pit lined with plastic that is a minimum of 10 millimeters thick. Refer to *Section 4.3 Concrete Waste Management* for additional design criteria and an example schematic. If the project includes placement of new concrete, slurry from sawcutting may be disposed of in facilities designated for the washout of concrete trucks instead constructing a separate containment.
- The containment shall be located a minimum of 50 feet away from inlets, swales, drainage ways, channels, and other waters, if the site configuration provides sufficient space to do so. In no case shall the collection area be closer than 20 feet from inlets, swales, drainage ways, channels and other waters.
- Several, portable, pre-fabricated, concrete washout, collection basins are commercially available and are an acceptable alternative to an onsite containment pit.
- Remove waste concrete when the containment is half full. Always maintain a minimum of one foot freeboard.

- Onsite evaporation of slurry water and recycling of the concrete waste is the preferred disposal method. When this is not feasible, discharge from the collection area shall only be allowed if a passive treatment system is used to remove the fines. Criteria are in *Section 3.7 Passive Treatment System*. Mechanical mixing is required in the collection area. The pH must be tested, and discharge is allowed only if the pH does not exceed 8.0. The pH may be lowered by adding sulfuric acid to the slurry water. Dewatering of the collection area after treatment shall follow the criteria in *Section 3.3 Dewatering Controls*.
- Care shall be exercised when treating the slurry water for discharge. Monitoring must be implemented to verify that discharges from the collection area do not violate groundwater or surface water quality standards.
- Geotextile fabrics such as those used for silt fence should not be used to control sawcutting waste, since the grain size is significantly smaller than the apparent opening size of the fabric.
- Use waste and recycling haulers and facilities approved by the local municipality.

Education

- Supervisors must be made aware of the potential environmental consequences of improperly handling sawcutting slurry and waste.
- Train all workers performing sawcutting operations on the proper slurry and cuttings collection and disposal procedures.

4.2.4 Design Guidance and Specifications

No specification for concrete sawcutting waste management is currently available in the Standard Specifications for Public Works Construction – North Central Texas Council of Governments.

4.2.5 Inspection and Maintenance Requirements

Concrete sawcutting waste management measures should be inspected regularly (at least as often as required by the TPDES Construction General Permit). Project personnel should inspect the operations to assure that operators are diligent in controlling the water produced by the sawcutting activities. Pavement should be inspected each day after operations to ensure that waste removal has been adequately performed. Residual waste should be cleaned. Reinforce proper procedures with workers.

Inspect the collection area for signs of unauthorized discharges. Repair containment area as needed. Remove sediment and fines when the collection area volume is reduced by 50 percent.

4.3 Concrete Waste Management

Waste Control

Description: Concrete waste at construction sites comes in two forms: 1) excess fresh concrete mix, including residual mix washed from trucks and equipment, and 2) concrete dust and concrete debris resulting from demolition. Both forms have the potential to impact water quality through stormwater runoff contact with the waste. The objective of concrete waste management is to dispose of these wastes in a manner that protects surface and ground water.

KEY CONSIDERATIONS

DESIGN CRITERIA:

- Prohibit the discharge of untreated concrete washout water
- Prohibit dumping waste concrete anywhere except at pre-determined, regulated, recycling or disposal sites
- Provide a washout containment with a minimum of 6 cubic feet of containment volume for every 10 cubic yards of concrete placed
- Minimum 1 foot freeboard on containment
- Minimum 10 mil plastic lining of containment
- Washout water evaporation and concrete recycling are the recommended disposal methods
- Educate drivers and operators on proper disposal and equipment cleaning procedures

LIMITATIONS:

- Does not address concrete sawcutting waste

MAINTENANCE REQUIREMENTS:

- Inspect regularly
- Check for and repair any damage to washout containment areas
- Clean up any overflow of washout pits
- Regularly remove and properly dispose of concrete waste

TARGETED POLLUTANTS

○ Sediment

● Nutrients & Toxic Materials

○ Oil & Grease

○ Floatable Materials

● Other Construction Wastes

APPLICATIONS

Perimeter Control

Slope Protection

Sediment Barrier

Channel Protection

Temporary Stabilization

Final Stabilization

Waste Management

Housekeeping Practices

IMPLEMENTATION CONSIDERATIONS

◒ Capital Costs

◒ Maintenance

● Training

○ Suitability for Slopes > 5%

Other Considerations:

- *None*

4.3.1 Primary Use

Concrete waste management is used to prevent the discharge of concrete wash water and waste into stormwater runoff. A number of water quality parameters can be affected by the introduction of concrete, especially fresh concrete. Concrete affects the pH of runoff, causing significant chemical changes in water bodies and harming aquatic life. Suspended solids in the form of both cement and aggregated dust are also generated from both fresh and demolished concrete waste.

4.3.2 Applications

Concrete waste management is applicable to all construction sites where existing concrete is being demolished or new concrete is being placed, regardless of the size of the total area disturbed. It is also applicable on repair and maintenance projects that may not be required to implement erosion and sediment controls.

4.3.3 Design Criteria

- The discharge of washout water to an inlet, swale, or any portion of the storm drainage system or a natural drainage system (e.g. channel) shall be prohibited.
- Construction plan notes shall state that the discharge of concrete washout to anything except a designated containment area is prohibited.
- Show the location of the concrete washout containment on the drawings, or require the contractor to provide this information.
- The contractor should be required to designate the site superintendent, foreman, or other person who is responsible for concrete placement to also be responsible for concrete waste management.

Unacceptable Waste Concrete Disposal Practices

- Dumping in vacant areas on the job-site.
- Illicit dumping onto off-site lots or any other placed not permitted to receive construction demoliotion debris.
- Dumping into ditches, drainage facilities, or natural water ways.
- Using concrete waste as fill material or bank stabilization.

Recommended Disposal Procedures

- Identify pre-determined, regulated, facilities for disposal of solid concrete waste. Whenever possible, haul the concrete waste to a recycling facility. Disposal facilities must have a Class IV (or more stringent) municipal solid waste permit from the TCEQ.
- A concrete washout pit or other containment shall be installed a minimum of 50 feet away from inlets, swales, drainage ways, channels, and other waters, if the site configuration provides sufficient space to do so. In no case shall concrete washout occur closer than 20 feet from inlets, swales, drainage ways, channels and other waters.
- Provide a washout area with a minimum of 6 cubic feet of containment volume for every 10 cubic yards of concrete poured. Alternatively, the designer may provide calculations sizing the containment based on the number of concrete trucks and pumps to be washed out.
- The containment shall be lined with plastic (minimum 10 millimeters thick) or an equivalent measure to prevent seepage to groundwater.
- Mosquitoes do not typically breed in the high pH of concrete washout water. However, the concrete washout containment should be managed in a manner that prevents the collection of other water that could be a potential breeding habitat.

  - Do not excavate the washout area until the day before the start of concrete placement to minimize the potential for collecting stormwater.
  - Do not discharge any water or wastewater into the containment except for concrete washout to prevent dilution of the high pH environment that is hostile to mosquitoes.
  - Remove the waste concrete and grade the containment closed within a week of completing concrete placement. Do not leave it open to collect stormwater.
  - If water must be pumped from the containment, it shall be collected in a tank, neutralized to lower the pH, and then hauled to a treatment facility for disposal. Alternatively, it may be hauled to a batch plant that has an onsite collection facility for concrete washout water.
  - Do **not** pump water directly from the containment to the Municipal Separate Storm Sewer System or a natural drainage way without treating for removal of fine particles and neutralization of the pH.
- Multiple concrete washout areas may be needed for larger projects to allow for drying time and proper disposal of the washout water and waste concrete.
- Portable, pre-fabricated, concrete washout containers are commercially available and are an acceptable alternative to excavating a washout area.
- Evaporation of the washout water and recycling of the concrete waste is the preferred disposal method. After the water has evaporated from the washout containment, the remaining cuttings and fine sediment shall be hauled from the site to a concrete recycling facility or a solid waste disposal facility.
- Remove waste concrete when the washout containment is half full. Always maintain a minimum of one foot freeboard.
- Use waste and recycling haulers and facilities approved by the local municipality.
- When evaporation of the washout water is not feasible, discharge from the collection area shall only be allowed if a passive treatment system is used to remove the fines. Criteria are in *Section 3.7 Passive Treatment System*. Mechanical mixing is required within the containment for passive treatment to be effective. The pH must be tested, and discharge is allowed only if the pH does not exceed 8.0. The pH may be lowered by adding sulfuric acid to the water. Dewatering of the collection area after treatment shall follow the criteria in *Section 3.3 Dewatering Controls*.
- Care shall be exercised when treating the concrete washout water for discharge. Monitoring must be implemented to verify that discharges do not violate groundwater or surface water quality standards.
- On large projects that are using a nearby batch plant, a washout facility associated with the plant and under the plant's TPDES Multi-Sector General Permit may be used instead of installing an onsite containment area for truck washout.

Education

- Drivers and equipment operators should be instructed on proper disposal and equipment washing practices (see above).
- Supervisors must be made aware of the potential environmental consequences of improperly handled concrete waste.

Enforcement

- The construction site manager or foreman must ensure that employees and pre-mix companies follow proper procedures for concrete disposal and equipment washing.
- Employees violating disposal or equipment cleaning directives must be re-educated or disciplined if necessary.

Demolition Practices

- Monitor weather and wind direction to ensure concrete dust is not entering drainage structures and surface waters.
- Spray water on structures being demolished to wet them before start of demolition operations. Reapply water whenever dust is observed.
- Construct sediment traps or other types of sediment detention devices downstream of demolition activities to capture and treat runoff from demolition wetting operations.

4.3.4 Design Guidance and Specifications

No specification for concrete waste management is currently available in the Standard Specifications for Public Works – North Central Texas Council of Governemtns.

4.3.5 Inspection and Maintenance Requirements

Concrete waste management controls should be inspected regularly (at least as often as required by the TPDES Construction General Permit) for proper handling of concrete waste. Check concrete washout pits and make repairs as needed. Washout pits should not be allowed to overflow. Maintain a schedule to regularly remove concrete waste and prevent over-filling.

If illicit dumping of concrete is found, remove the waste and reinforce proper disposal methods through education of employees.

4.3.6 Example Schematics

The following schematics are example applications of the construction control. They are intended to assist in understanding the control's design and function.

The schematics are **not for construction**. They may serve as a starting point for creating a construction detail, but they must be site adapted by the designer. In addition, dimensions and notes appropriate for the application must be added by the designer.

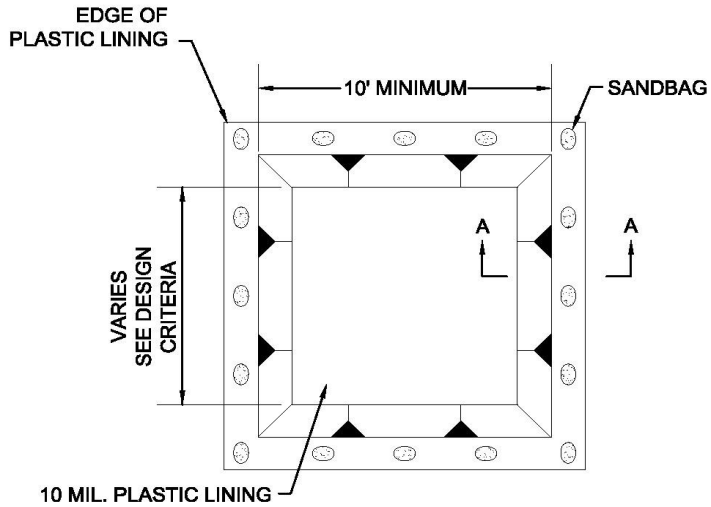

CONCRETE WASHOUT PLAN VIEW
N.T.S.

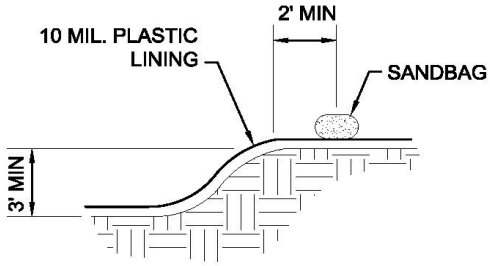

CONCRETE WASHOUT SECTION A-A
N.T.S.

NOTE: SANDBAGS MAY BE REPLACED BY A SOIL
BERM TO ANCHOR THE PLASTIC LINING.

Figure 4.1 Schematics of Concrete Washout Containment

4.4 Debris and Trash Management

Waste Control

Description: Large volumes of debris and trash are often generated at construction sites, including packaging, pallets, wood waste, personal trash, scrap material, and a variety of other wastes. The objective of debris and trash management is to minimize the potential of stormwater contamination from solid waste through appropriate storage and disposal practices. Recycling of construction debris is encouraged to reduce the volume of material to be disposed of and associated costs of disposal.

KEY CONSIDERATIONS

DESIGN CRITERIA:

- Implement a job-site waste handling and disposal education and awareness program
- Provide sufficient and appropriate waste storage containers
- Provide timely removal of stored solid waste materials
- Train workers and monitor compliance

LIMITATIONS:

- Only addresses non-hazardous solid waste
- One part of a comprehensive construction site waste management program

MAINTENANCE REQUIREMENTS:

- Inspect regularly
- Empty waste containers regularly
- Clean up loose trash and debris daily
- Verify procedures are being followed
- Train new employees and regularly re-train all employees

TARGETED POLLUTANTS

○ Sediment
● Nutrients & Toxic Materials
○ Oil & Grease
● Floatable Materials
● Other Construction Wastes

APPLICATIONS

Perimeter Control
Slope Protection
Sediment Barrier
Channel Protection
Temporary Stabilization
Final Stabilization
Waste Management
Housekeeping Practices

IMPLEMENTATION CONSIDERATIONS

◒ Capital Costs
◒ Maintenance
● Training
○ Suitability for Slopes > 5%

Other Considerations:

- *None*

4.4.1 Primary Use

Debris and trash management is used to minimize floatables and other wastes in stormwater. By controlling the trash and debris onsite, stormwater quality is improved and the need for extensive clean up upon completion of the project is reduced.

4.4.2 Applications

Debris and trash management is applicable on all construction sites where workers are present. Even if the only construction activity is earthwork, workers will still have drink bottles, lunch bags, and other wastes that must be managed.

Solid waste management for construction sites is based on proper storage and disposal practices by construction workers and supervisors. Key elements of the program are education and modification of improper disposal habits. Cooperation and vigilance is required on the part of supervisors and workers to ensure that the procedures are followed.

The following are lists describing the type of targeted materials.

- Construction (and Demolition) Debris:

  Dimensional lumber

  Miscellaneous wood (pallets, plywood, etc)

  Copper (pipe and electrical wiring)

  Miscellaneous metal (studs, pipe, conduit, sheathing, nails, etc)

  Insulation

  Brick and mortar

  Shingles

  Roofing materials

  Gypsum board

- Trash:

  Paper and cardboard (packaging, containers, wrappers)

  Plastic (packaging, bottles, containers)

  Styrofoam (cups, packing, and forms)

  Food and beverage containers

  Food waste

4.4.3 Design Criteria

- Construction plan notes shall include proper debris and trash management procedures.
- Show the location of waste storage containers on the drawings, or require the contractor to add this information.
- The contractor should be required to designate a site superintendent, foreman, safety officer, or other senior person who is onsite daily to be responsible for implementing debris and trash management.

Storage Procedures

- All waste sources and storage areas shall be located a minimum of 50 feet away from inlets, swales, drainage ways, channels and other waters, if the site configuration provides sufficient space to do so.

In no case shall material and waste sources be closer than 20 feet from inlets, swales, drainage ways, channels, and other waters.

- Construction waste and trash shall be stored in a manner that minimizes its exposure to precipitation and stormwater runoff.
- Whenever possible, minimize production of debris and trash.
- Instruct construction workers in proper debris and trash storage and handling procedures.
- Segregate potentially hazardous waste from non-hazardous construction site debris. Hazardous waste shall be managed according to the criteria in *Section 4.1 Chemical Management*.
- Segregate recyclable or re-usable construction debris from other waste materials. A goal of re-using or recycling 50 percent of the construction debris and waste is recommended.
- Keep debris and trash under cover in either a closed dumpster or other enclosed trash container that limits contact with rain and runoff and prevents light materials from blowing out.
- Check the municipality's storage requirements. Some municipalities have specific requirements for the size and type of waste containers for construction sites.
- Do not allow trash containers to overflow. Do not allow waste materials to accumulate on the ground.
- Prohibit littering by workers and visitors.
- Police site daily for litter and debris.
- Enforce solid waste handling and storage procedures.

Disposal Procedures

- If feasible, recycle construction and demolition debris such as wood, metal, and concrete.
- Trash and debris shall be removed from the site at regular intervals that are scheduled to empty containers when they are 90 percent full or more frequently.
- General construction debris may be hauled to a licensed construction debris landfill (typically less expensive than a sanitary landfill).
- Use waste and recycling haulers/facilities approved by the local municipality.
- No waste, trash, or debris shall be buried, burned or otherwise disposed of onsite.
- Cleared trees and brush may be burned if authorized by the municipality and proper permits are obtained from the county and/or TCEQ. Chipping of trees and brush for use as mulch is the preferred alternative to burning or offsite disposal.

Education

- Educate all workers on solid waste storage and disposal procedures.
- Instruct workers in identification of solid waste and hazardous waste.
- Have regular meetings to discuss and reinforce disposal procedures (incorporate in regular safety seminars).
- Clearly mark on all debris and trash containers which materials are acceptable.

Quality Control

- Foreman and/or construction supervisor shall monitor onsite solid waste storage and disposal procedures.
- Check the site, particularly areas frequented by workers during lunch and breaks, for loose trash and debris and the end of each work day.

- Discipline workers who repeatedly violate procedures.

4.4.4 Design Guidance and Specifications

No specification for debris and trash management measures is found currently available in the Standard Specifications for Public Works Construction – North Central Texas Council of Governments.

4.4.5 Inspection and Maintenance Requirements

Debris and trash management measures should be inspected regularly (at least as often as required by the TPDES Construction General Permit). If waste containers are overflowing, call the waste hauler immediately for a pick-up. If loose trash and debris are found around the site, reinforce proper waste management procedures through education of workers.

Construction sites must maintain separate waste containers clearly marked for non-hazardous, hazardous and recyclable waste. Check solid waste containers for chemical, special, or hazardous wastes that are improperly placed in them. These wastes shall be removed and handled according to criteria in *Section 4.1 Chemical Management*.

The site should be checked for loose litter and debris at the end of each working day.

4.5 Hyper-Chlorinated Water Management

Waste Control

Description: Hyper-chlorinated water is routinely used to disinfect new waterlines and appurtenances. Chlorine protects humans from pathogens in water, but it is toxic to aquatic ecosystems. The objective of hyper-chlorinated water management is to discharge the water in a manner that protects surface water and related aquatic ecosystems.

KEY CONSIDERATIONS

DESIGN CRITERIA:

- Educate employees on proper procedures
- Discharge to sanitary sewer if the system operator approves
- Discharge water onsite for natural chlorine attenuation
- Use appropriate dosage for chemical de-chlorination based on chemical used and chlorine concentration
- Chlorine concentration must be less than 4 ppm before leaving the site
- Use velocity dissipation devices for discharges
- Always monitor receiving waters for negative effects

LIMITATIONS:

- Discharge to sanitary sewer limited by sewer capacity
- Discharges limited to areas without vegetation that is to be preserved
- Wet, cool, and overcast days limits chlorine attenuation and removal

MAINTENANCE REQUIREMENTS:

- Monitor continuously during discharge
- Check for and repair any erosion caused by discharge
- Sample and test receiving water hourly for chlorine

TARGETED POLLUTANTS

○ Sediment
● Nutrients & Toxic Materials
○ Oil & Grease
○ Floatable Materials
○ Other Construction Wastes

APPLICATIONS

Perimeter Control
Slope Protection
Sediment Barrier
Channel Protection
Temporary Stabilization
Final Stabilization
Waste Management
Housekeeping Practices

IMPLEMENTATION CONSIDERATIONS

◒ Capital Costs
○ Maintenance
● Training
○ Suitability for Slopes > 5%

Other Considerations:

- *None*

4.5.1 Primary Use

Hyper-chlorinated water is used to disinfect new water lines.

4.5.2 Applications

Construction sites that install new water lines or repair or replace existing water lines should use hyper-chlorinated water management measures.

4.5.3 Design Criteria

- Drawing notes shall include procedures for the proper discharge of hyper-chlorinated water from waterline disinfection.
- The contractor should be required to designate the site superintendent, foreman, or other person who is responsible for water line disinfection to also be responsible for hyper-chlorinated water management.
- Educate employees about the environmental hazards of high chlorine concentrations and the proper procedures for handling hyper-chlorinated water.
- Hyper-chlorinated water shall not be discharged to the environment unless the chlorine concentration is reduced to 4 ppm or less by chemically treating to dechlorinate or by onsite retention until natural attenuation occurs.
- Water with a measurable chlorine concentration of less than 4 ppm is considered potable and an authorized discharge; however, large volumes of water with chlorine at this concentration can still be toxic to aquatic ecosystems. Do not discharge water that has been de-chlorinated to 4 ppm directly to surface water. It shall be discharged onto vegetation or through a conveyance system for further attenuation of the chlorine before it reaches surface water.
- Discharges of high flow rate and velocities shall be directed to velocity dissipation devices.

Discharge to Sanitary Sewers

- The preferred method of disposal for hyper-chlorinated water is discharge into a sanitary sewer system.
- Permission from the sanitary sewer operator **must** be obtained to discharge to the sanitary sewer.
- Limitations on discharges to the sanitary sewer are the capacity of the sanitary sewer and the availability of a sewer manhole near the construction site.
- The designer shall verify that the sanitary sewer is capable of receiving the flow rate that will result from dewatering the disinfected line within the required time.
- Consideration should be given to timing the discharge with the daily low flow period for the sanitary sewer system.

Onsite Discharge

- Hyper-chlorinated water may be applied to the construction site if it can be done without causing a discharge. The feasibility of this option is dependent on the volume of water, the size of the construction site, and the conditions of the site. Site application should not be done when the soil moisture content is high due to recent storm events.
- Chlorine can burn vegetation, so it should not be used to water vegetation that is being used for stabilization, vegetated filters or buffers, or other vegetation to be preserved.
- Hyper-chlorinated water may be discharged to an onsite retention area until natural attenuation occurs. The area may be a dry stormwater retention basin, or a portion of the site may be graded to form a temporary pit or bermed area.

- Natural attenuation of the chlorine may be aided by aeration. Air can be added to the water by directing the discharge over a rough surface (e.g. riprap) before it enters the temporary retention area or an aeration device (e.g. circulation pump) can be placed in the retention area.
- Onsite discharge may require several hours to a few days before the water is safe to discharge. The rate at which chlorine will attenuate is affected by soil conditions and weather conditions. Attenuation will occur quickest during warm, sunny, dry periods.
- If the hyper-chlorinated water is retained in a pit or basin, and then pumped to discharge, pumping shall follow the criteria in *Section 3.3 Dewatering Controls*.

Chemical Dechlorination

- If non-chemical means of dechlorination are not feasible, chemical methods may be used to neutralize the chlorine before discharging the hyper-chlorinated water.
- Vitamin C in the form of ascorbic acid or sodium ascorbate is the preferred dechlorination agent.
- Consider the National Fire Protection Association (NFPA) rating when selecting a dechlorination chemical. The NFPA rating is given by a series of three numbers ranging from 0 to 4, with 0 being no risk and 4 the highest risk. The sequence of numbers rank the health hazard, flammability risk and reactivity risk of the chemical. A NFPA rating of 0,0,0 indicates no risk for all three categories.
- Ensure appropriate personal protective equipment (PPE) is specified for workers depending on the chemical being used to neutralize the chlorine.
- The chemicals listed in Table 4.1 may be used to neutralize chlorine.

Table 4.1 Chemical Dechlorination Agents and Approximate Dosages

Dechlorinating Agent	*Dosing Rate (parts Agent : parts Chlorine)*	*Advantages*	*Disadvantages*
Ascorbic Acid (form of Vitamin C)	2.5:1	• Not toxic to aquatic species • Quick reaction time • NFPA rating of 0,0,0	• May lower pH in receiving water
Sodium Ascorbate (form of Vitamin C)	2.8:1	• Does not affect pH • Not toxic to aquatic species • Quick reaction time • NFPA rating of 0,0,0	• Greater amount needed than Ascorbic Acid • More expensive
Sodium Thiosulfate	2:1 to 7:1 depending on pH	• Less expensive • Readily available • Long history of use (familiarity)	• Must calculate dosage based on pH • Skin, eye, nose and throat irritant • Consumes oxygen in water • May encourage bacterial growth in receiving streams
Calcium Thiosulfate	1:1 to 0.5:1 depending on pH	• Less expensive • Not toxic to aquatic species • NFPA rating of 0,0,0	• Must calculate dosage based on pH • Over-dosing produces suspended solids • Over-dosing may increase turbidity in receiving water • May encourage bacterial growth in receiving streams

- The designer shall confirm dosages with the chemical supplier before using the dechlorination agent.

- Chlorine and residual agent concentrations and the pH of the discharged water shall be monitored at least hourly using field tests.
- The treated water should be discharged onto pavement or into a dry conveyance system to allow aeration and reaction time before the dechlorinated water reaches the receiving water. The receiving water should be closely monitored for any signs of negative effects from the discharge.

4.5.4 Design Guidance and Specifications

No specification for hyper-chlorinated water management is currently available in the Standard Specifications for Public Works Construction – North Central Texas Council of Governments.

4.5.5 Inspection and Maintenance Requirements

Hyper-chlorinated water management measures should be monitored continuously while the hyper-chlorinated water is being discharged. Discharges to a sanitary sewer should be monitored for back-ups or overflows that indicate the discharge is exceeding the sewer's capacity. If these occur, the rate of discharge must be decreased or another discharge method is needed.

Onsite or chemically treated discharge should be monitored for chlorine and residual chemical concentrations. Verify that discharges are not causing erosion, and modify the discharge to use velocity dissipation devices if erosion is occurring. Repair any eroded areas. If water is being pumped from a temporary retention area, verify that appropriate dewatering controls are in place.

For all discharges, frequently inspect the receiving water for any evidence of negative effects. Sample and test the receiving water hourly for chlorine. Stop the discharge immediately if chlorine is detected and modify the discharge procedures before resuming.

4.7 Sanitary Waste Management

Waste Control

Description: The objective of sanitary waste management is to provide for collection and disposal of sanitary waste in a manner that minimizes the exposure to precipitation and stormwater. This is most often accomplished by providing portable facilities for construction site workers.

KEY CONSIDERATIONS

DESIGN CRITERIA:

- Provide sanitary facilities at the rate of one toilet per 10 workers for a 40-50 hour work week
- Locate portable toilets a minimum of 50 feet away from storm drain inlets, conveyance channels or surface waters
- If unable to meet the 50 foot requirement, locate portable toilets at least 20 feet away and provide secondary containment
- Show location of portable toilets on the drawings
- Have a plan to clean up spills

LIMITATIONS:

- Multiple facilities and/or facilities in several locations may be needed to adequately serve a construction site
- Facilities are subject to vandalism if not within a secured construction site

MAINTENANCE REQUIREMENTS:

- Inspect regularly
- Check for proper servicing, leaks and spills
- Service toilets at the frequency recommended by the supplier

TARGETED POLLUTANTS

- ○ Sediment
- ● Nutrients & Toxic Materials
- ○ Oil & Grease
- ○ Floatable Materials
- ● Other Construction Wastes

APPLICATIONS

Perimeter Control

Slope Protection

Sediment Barrier

Channel Protection

Temporary Stabilization

Final Stabilization

Waste Management

Housekeeping Practices

IMPLEMENTATION CONSIDERATIONS

- ○ Capital Costs
- ◒ Maintenance
- ◒ Training
- ○ Suitability for Slopes > 5%

Other Considerations:

- *None*

4.7.1 Primary Use

Sanitary facilities are used to properly store and dispose of sanitary wastes that are generated onsite.

4.7.2 Applications

Sanitary facilities should be available to workers at all construction sites. If permanent facilities are not available, portable toilets are placed at the construction site.

4.7.3 Design Criteria

- Construction plan notes shall include requirements for the contractor to provide an appropriate number of portable toilets based on the number of employees using the toilets and the hours they will work. The typical standard is one portable toilet per 10 workers for a 40-50 hour work week.
- The location of portable toilets shall be shown on the drawings.
- Sanitary facilities shall be placed a minimum of 50 feet away from storm drain inlets, conveyance channels or surface waters. If unable to meet the 50 foot requirement due to site configuration, portable toilets shall be a minimum of 20 feet away from storm drain inlets, conveyance channels or surface waters and secondary containment shall be provided in case of spills.
- The location of the portable toilets shall be accessible to maintenance trucks without damaging erosion and sediment controls or causing erosion or tracking problems.
- Sanitary facilities shall be fully enclosed and designed in a manner that minimizes the exposure of sanitary waste to precipitation and stormwater runoff.
- When high winds are expected, portable toilets shall be anchored or otherwise secured to prevent them from being blown over.
- The company that supplies and maintains the portable toilets shall be notified immediately if a toilet is tipped over or damaged in a way that results in a discharge. Discharged solid matter shall be vacuumed into the septic truck by the company that maintains the toilets. A solution of 10 parts water to 1 parts bleach shall be applied to all ground surfaces contaminated by liquids from the toilet.
- The operator of the municipal separate storm sewer system (MS4) shall be notified if a discharge from the portable toilets enters the MS4 or a natural channel.

4.7.4 Design Guidance and Specifications

No specification for sanitary facilities is currently available in the Standard Specifications for Public Works Construction – North Central Texas Council of Governments.

4.7.5 Inspection and Maintenance Requirements

Sanitary facilities should be inspected regularly (at least as often as required by the TPDES Construction General Permit) for proper servicing, leaks and spills. Portable toilets shall be regularly serviced at the frequency recommended by the supplier for the number of people using the facility.

4.8 Spill and Leak Response Procedures

Waste Control

Description: Spill and leak response procedures address the management of spills and leaks that may occur at the construction site. The objective of the spill and leak response procedures is to minimize the discharge of pollutants from unplanned releases of chemicals, fuel, motor vehicle fluids, hazardous materials or wastes through appropriate recognition and response procedures.

KEY CONSIDERATIONS

DESIGN CRITERIA:

- Develop procedures based on the Material Safety and Data Sheets for substances onsite
- Maintain spill kits for petroleum products and other chemicals frequently onsite
- Post emergency contact numbers
- Designate a spill response coordinator
- Train employees
- Review reporting requirements for onsite chemicals

LIMITATIONS:

- Procedures susceptible to being forgotten because they are seldom or never used
- Larger spills and spills of extremely hazardous materials require special equipment and should be handled by professionals
- Not applicable to long-term contamination remediation

MAINTENANCE REQUIREMENTS:

- Review procedures regularly
- Verify spill kits, MSDSs, and emergency contacts are readily available
- Train new employees and regularly re-train all employees

TARGETED POLLUTANTS

○ Sediment

● Nutrients & Toxic Materials

● Oil & Grease

○ Floatable Materials

● Other Construction Wastes

APPLICATIONS

Perimeter Control

Slope Protection

Sediment Barrier

Channel Protection

Temporary Stabilization

Final Stabilization

Waste Management

Housekeeping Practices

IMPLEMENTATION CONSIDERATIONS

◒ Capital Costs

◒ Maintenance

● Training

○ Suitability for Slopes > 5%

Other Considerations:

- *OSHA, EPA and TCEQ regulations*

4.8.1 Primary Use

Spill and leak procedures are used to minimize the impact of accidental releases on surface water. Pollutants that are of concern for spill and leaks include chemicals, hazardous materials, fuel, motor vehicle fluids, washout waters, and wastes. Spill and leak response is a secondary control. Proper procedures for managing these pollutants should be the primary control and are the best way to prevent the need for spill and leak response.

4.8.2 Applications

Spill and leak response procedures are applicable on all construction sites where chemicals, hazardous materials, fuels, etc. are stored or used. They are most important when the construction site is adjacent or near to a floodplain, wetland, stream, or other waters.

4.8.3 Design Criteria

General

- An effective spill and leak response depends on proper recognition and response practices by construction workers and supervisors. Key elements are education and training.
- Records of releases that exceed the Reportable Quantity (RQ) for oil and hazardous substances should be maintained in accordance with the Federal and State regulations.
- Emergency contact information and spill response procedures shall be posted in a readily available area for access by all employees and subcontractors.
- Spill containment kits should be maintained for petroleum products and other chemicals that are regularly onsite. Materials in kits should be based on containment guidelines in the Material Safety and Data Sheets (MSDSs) for the substance most frequently onsite.
- Spill kits are intended for response to small spills, typically less than 5 gallons, of substances that are not extremely hazardous.
- Significant spills or other releases warrant immediate response by trained professionals.
- Suspected job-site contamination should be immediately reported to regulatory authorities and protective actions taken.

Coordinator

- The contractor should be required to designate a site superintendent, foreman, safety officer, or other senior person who is onsite daily to be the Spill and Leak Response Coordinator.
- The coordinator must have knowledge of and be trained in correct spill and leak response procedures.
- The coordinator shall be responsible for implementing the spill and leak procedures and training all employees and sub-contractors on the site-specific spill and leak procedures. The training should include their responsibility to immediately notify the coordinator if a spill or leak occurs.

Spill Response

- Upon discovery of a spill, employees and subcontractors shall implement the following procedures:
  - Immediately stop work and clear the area by moving upwind of the spill.
  - Remove all ignition sources.
  - Notify the Spill and Leak Response Coordinator.
  - If there is an immediate danger to health or life, contact 911.

- The Spill and Leak Response Coordinator shall perform the following when the spill is not immediately dangerous to health and safety:
  - Consult the MSDS for safety and response procedures.
  - If it can be done safely, use onsite spill kits and soil to contain the spill.
  - Notify a hazardous response company to remove and properly dispose of the spilled material and the contaminated containment materials.

Spill Reporting

- The Spill and Leak Response Coordinator is responsible for notifying authorities of spills and leaks. Notification requirements are based on Reportable Quantities as established by the type or material, quantity and location (onto land or into water in the state) of the release.
- Reportable Quantities (RQ) in the State of Texas are established by the TCEQ in Texas Administrative Code Title 30, Chapter 327 (30 TAC 327) Spill Prevention and Control.
- The Texas RQ for petroleum products and used oil is 25 gallons released onto land or any amount that causes sheen on water.
- Reportable Quantities for all other substances are listed in 30 TAC 327.4, which references the EPA List of Lists (EPA 550-B-01-003) available at: http://www.epa.gov/ceppo/pubs/title3.pdf
- The Spill and Leak Response Coordinator shall notify the following:
  - The municipality that operates the local Municipal Separate Storm Sewer System (MS4) if a spill or leak enters public rights-of-way or any type of drainage way or drainage infrastructure within the jurisdiction of the municipality.
  - State of Texas Spill Report Hotline at 1-800-832-8224 if the spill or leak exceeds the RQ; and during regular business hours, the TCEQ Dallas/Fort Worth Regional Office at 817-588-5800.
  - National Spill Response Center at 1-800-424-8802 if the spill or leak exceeds the RQ.

4.8.4 Design Guidance and Specifications

National guidance for response procedures are established by the Environmental Protection Agency (EPA) in the Code of Federal Regulations (CFR). Specific sections addressing spills are governed by:

- 40 CFR Part 68 Chemical Accident Prevention Provisions.
- 40 CFR Part 302 Designation, Reportable Quantities (RQ) and Notification.
- 40 CFR Part 355 Emergency Planning and Notification.

Guidance for emergency response procedures in the State of Texas are established by the Texas Commission on Environmental Quality (TCEQ) in the Texas Administrative Code Title 30, Chapter 327, Spill Prevention and Control.

No specification for construction of this item is currently available in the Standard Specifications for Public Works Construction – North Central Texas Council of Governments.

4.8.5 Inspection and Maintenance Requirements

Spill and leak response measures should be inspected regularly (at least as often as required by the TPDES Construction General Permit). Verify that spill containment materials are available for small spills. Also verify that emergency contact information is posted. These phone numbers and Material Safety and Data Sheets should be in a location that is readily accessible to workers.

If procedures are lacking, reinforce requirements by re-training employees.

4.9 Subgrade Stabilization Management

Material Control

Description: Lime and other chemicals are used extensively in the North Central Texas region to stabilize pavement subgrades for roadways, parking lots, and other paved surfaces, and as a subgrade amendment for building pad sites. These chemicals are applied to the soil and mixed through disking and other techniques, and then allowed to cure. The objective of subgrade stabilization management is to reduce the potential for runoff to carry the chemicals offsite, where they may impact aquatic life in streams, ponds, and other water bodies.

KEY CONSIDERATIONS

DESIGN CRITERIA:

- Educate employees on proper procedures
- Include procedural controls in stabilization specifications
- Limit stabilization operations to that which can be thoroughly mixed and compacted by the end of each workday
- Prohibit vehicle traffic, other than water trucks and mixing equipment, from passing over the area being stabilized until mixing is completed
- Avoid applications when there is a significant probability of rain that will produce runoff
- Roughen areas adjacent and downstream of stabilized areas to intercept lime from runoff
- Provide secondary containment according to *Section 4.1 Chemical Management* for stabilizers stored onsite

LIMITATIONS:

- Prevention of contamination is only effective method
- Does not address spill response when discharge occurs

MAINTENANCE REQUIREMENTS:

- Inspect down slope perimeters and outfalls regularly during stabilization operations
- Immediately halt operations if a discharge is found and modify procedures to prevent future discharges

TARGETED POLLUTANTS

- ○ Sediment
- ◒ Nutrients & Toxic Materials
- ○ Oil & Grease
- ○ Floatable Materials
- ○ Other Construction Wastes

APPLICATIONS

Perimeter Control

Slope Protection

Sediment Barrier

Channel Protection

Temporary Stabilization

Final Stabilization

Waste Management

Housekeeping Practices

IMPLEMENTATION CONSIDERATIONS

- ○ Capital Costs
- ◒ Maintenance
- ◒ Training
- ○ Suitability for Slopes > 5%

Other Considerations:

- *Chemical management controls for onsite storage of stabilization chemicals*

4.9.1 Primary Use

This measure should be implemented when chemicals are required for soil stabilization. Lime is the most commonly used for stabilization and is considered a chemical. Other agents may also be used for subgrade stabilization depending on the soil and site conditions.

4.9.2 Applications

Chemical stabilization can be used under a variety of conditions. The engineer should determine the applicability of chemical stabilization based on site conditions such as available open space, quantity of area to be stabilized, proximity of nearby water courses and other measures employed at the site. The use of diversion dikes and interceptor swales (see appropriate sections) to divert runoff away from areas to be stabilized can be used in conjunction with these techniques to reduce the potential impact of discharges from chemical stabilization.

Management of stabilization chemicals is based on implementing procedures to prevent a discharge. If a discharge occurs, it shall be considered a spill and handled according to the criteria in *Section 4.8 Spill and Leak Response Procedures*.

4.9.3 Design Criteria

- Construction plan notes or stabilization shall include procedural controls to minimize the discharge of chemical stabilizers.
- The contractor shall limit the amount of stabilizing agent onsite to that which can be thoroughly mixed and compacted by the end of each workday.
- Stabilizers shall be applied at rates that result in no runoff.
- Stabilization shall not occur immediately before and during rainfall events.
- No traffic other than water trucks and mixing equipment shall be allowed to pass over the area being stabilized until after completion of mixing the chemical.
- Areas adjacent and downstream of stabilized areas shall be roughened to intercept chemical runoff and reduce runoff velocity.
- Geotextile fabrics such as those used for silt fence should not be used to treat chemical runoff, because the chemicals are dissolved in the water and won't be affected by a barrier and the suspended solids are significantly smaller than the apparent opening size of the fabric.
- For areas in which phasing of chemical staibilization is impractical, a curing seal (such as Liquid Asphalt, Grace MC-250, or MC-800) applied at a rate of 0.15 gallons per square yard of surface can be used to protect the base.
- Use of sediment basins with a significant (>36 hour) drawdown time is encouraged to capture any accidental lime or chemical overflows when large areas are being stabilized (*Section 3.9 Sediment Basin*).
- Provide containment around chemical storage, loading and dispensing areas.
- If soil stabilizers are stored onsite, they shall be considered hazardous material and shall be managed according to the criteria in *Section 4.1 Chemical Management* to capture any accidental lime or chemical overflow.

4.9.4 Design Guidance and Specifications

No specification for subgrade stabilization management is currently available in the Standard Specifications for Public Works Construction – North Central Texas Council of Governments.

4.9.5 Inspection and Maintenance Requirements

Subgrade stabilization operation should be observed frequently as the operations proceed for evidence of discharges. Inspect the down slope perimeter and all outfalls for evidence of discharges. Pay particularly attention to the outfall of drainage pipes connected to inlets within the area being stabilized. If a discharge is found, immediately halt stabilization operations until additional controls can be implemented.

4.9.6 Example Schematic

The following schematic is an example application of the construction control. It is intended to assist in understanding the control's design and function.

The schematic is **not for construction**. It may serve as a starting point for creating a construction detail, but it must be site adapted by the designer. In addition, dimensions and notes appropriate for the application must be added by the designer.

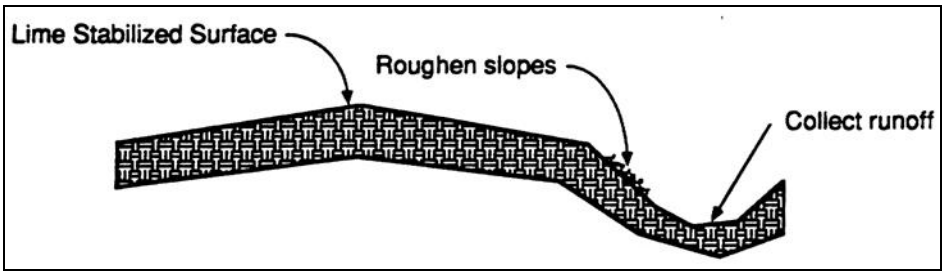

Figure 4.2 Schematic of Controls for Subgrade Stabilization

4.10 Vehicle and Equipment Management

Material and Waste Control

Description: Vehicle and equipment management addresses the practices associated with proper use and maintenance of vehicles and equipment at construction sites. The objective is to minimize the discharge of pollutants from vehicle and equipment operation, fueling, maintenance, and washing.

KEY CONSIDERATIONS

DESIGN CRITERIA:

- Prohibit the discharge of maintenance fluids and wash water with soap
- If feasible, prohibit onsite vehicle washing
- If feasible, prohibit onsite maintenance except fueling
- Provide secondary containment that's 110 percent of the largest container in the containment
- Use spill/overflow devices for fueling
- Never leave a fueling operation unattended
- Label all waste containers
- Train workers in proper procedures

LIMITATIONS:

- Cost of maintenance, repairs, and spill prevention equipment
- One part of a comprehensive construction site waste management program
- Does not address spill and leak response procedures

MAINTENANCE REQUIREMENTS:

- Inspect regularly
- Check for signs of leaks and spills and take corrective actions
- Place drip pans under leaking vehicles and equipment when parked
- Verify procedures are being followed
- Train new employees and regularly re-train all employees

TARGETED POLLUTANTS

○ Sediment

● Nutrients & Toxic Materials

● Oil & Grease

○ Floatable Materials

● Other Construction Wastes

APPLICATIONS

Perimeter Control

Slope Protection

Sediment Barrier

Channel Protection

Temporary Stabilization

Final Stabilization

Waste Management

Housekeeping Practices

IMPLEMENTATION CONSIDERATIONS

◒ Capital Costs

◒ Maintenance

● Training

○ Suitability for Slopes > 5%

Other Considerations:

- *None*

4.10.1 Primary Use

Vehicle and equipment management is used to minimize the pollutants that enter stormwater from fueling and maintenance activities.

4.10.2 Applications

Vehicle and equipment management is applicable on every construction site. The management controls are most effective when used in conjunction with controls in *Section 4.8 Spill and Leak Response Procedures*.

The management techniques are based on proper recognition and handling of pollutant sources related to vehicles and equipment. Key elements are education, established procedures, and provisions for safe storage and disposal of wastes. The following list (not all inclusive) gives examples of the targeted materials:

- Fuels
- Lube Oils
- Antifreeze
- Solvents
- Wash water

4.10.3 Design Criteria

- Construction plan notes shall state that the discharge of fuels, oils, or other pollutants used in vehicle and equipment operation and maintenance is prohibited.
- Construction plan notes shall state that the discharge of soaps or solvents used in vehicle and equipment washing is prohibited.
- On the construction plans, show the location of fuel tanks, motor vehicle fluids storage, and waste storage, including secondary containment, or require the contractor to provide this information.
- Provide secondary containment for fuel, new and waste oil, and other maintenance fluids that are stored onsite. Secondary containment shall have a minimum volume of 110 percent of the largest container within the containment.
- Criteria for the response to spills of motor vehicle fluids are in *Section 4.8 Spill and Leak Response Procedures*.
- The contractor should be required to designate a site superintendent, foreman, safety officer, or other senior person, who is on the site daily, to be responsible for implementing vehicle and equipment management.

Vehicle Washing

- Minimize the potential for the discharge of pollutants from equipment and vehicle washing by prohibiting these activities onsite, if practical. Vehicles and equipment should be transported to a commercial vehicle wash facility with appropriate discharge controls.
- Designate a wash area if vehicle and equipment washing must be done onsite. Require all washing to be done at this location. The area shall be graded so that all wash water flows to a sediment basin or other sediment control that provides equivalent or better treatment.
- Do not use soap for vehicle and equipment washing. Sediment controls will not remove soap from the wash water.

- Vehicle and equipment wash water may contain oils, greases, and heavy metals. Treatment to remove these pollutants is needed in addition to sediment trapping. Any wash water that has sheen on it must be considered polluted and cannot be discharged from the site without appropriate treatment. State or local discharge permits may be required.

Maintenance

- If possible, prohibit onsite maintenance except for fueling. Otherwise, limit onsite maintenance to routine preventive maintenance.
- Maintenance fluids should be stored in appropriate containers (closed drums or similar) and under cover.
- The ground under vehicles and equipment parked onsite should be inspected for drips and leaks before each use. Drip pans should be placed under parked vehicles and equipment that leak or drip.
- Vehicles and equipment that leak or drip should be removed from the site for repair as soon as possible.
- Vehicles and equipment that become inoperative should be removed from the site for repairs.

Fueling

- Check the municipality's requirements for fuel tanks. Some municipalities have specific requirements for the type of tank and secondary containment. At a minimum, local fire codes apply.
- Fuel should be dispensed using a drip pan or other spill/overflow device or within containment berms or other secondary containment.
- If the containment control is an earthen pit or berm, the containment shall be lined with plastic.
- If an automatic pump is used for fueling, it should be equipped with an overfill protection device.
- Workers performing fueling operations shall be trained in the correct procedures for fueling and spill response.
- Workers performing fueling operations shall be present and observe the fueling at all times. Fueling shall not be left unattended.
- A spill containment kit shall be maintained within 25 feet of the fueling area.

Waste Handling and Disposal

- Ensure that adequate waste storage volume is available.
- All waste containers shall be clearly labeled.
- Handling and disposal of waste from vehicle and equipment maintenance should be according to the criteria in *Section 4.1 Chemical Management*.

Education

- Instruct workers on procedures for washing, maintaining, and fueling vehicles and equipment.
- Instruct workers in identification of pollutants associated with vehicles and equipment.
- Have regular meetings to discuss and reinforce procedures (incorporate into regular safety briefings).
- Establish a continuing education program to train new employees.

4.10.4 Design Guidance and Specifications

No specification for vehicle and equipment management is currently available in the Standard Specifications for Public Works Construction – North Central Texas Council of Governments.

4.10.5 Inspection and Maintenance Requirements

Vehicle and equipment management controls should be inspected regularly (at least as often as required by the TPDES Construction General Permit). Verify that washing, fueling, storage, and disposal procedures are being followed. Correct workers where needed.

Fueling and maintenance fluid storage areas should be checked for signs of leakage or spills. If evidence is found, corrective actions should be implemented. Reinforce proper procedures through re-education of employees. Inspect areas where vehicles and equipment are parked for signs of leaks. Use drip pans where needed.

Appendix F

SWPPP Management Logs

Appendix G

Delegation of Authority

Delegation of Authority

I, _____ (name), hereby designate the person or specifically described position below to be a duly authorized representative for the purpose of overseeing compliance with environmental requirements, including the TPDES General Permit No. TXR150000, at the City of El Paso Streetcar construction site. The designee is authorized to sign any reports, stormwater pollution prevention plans and all other documents required by the permit.

_____ (name of person or position)

_____ (company)

_____ (address)

_____ (city, state, zip)

_____ (phone)

By signing this authorization, I confirm that I meet the requirements to make such a designation as set forth in Title 30 Texas Administrative Code (TAC) 305.128, and that the designee above meets the definition of a "duly authorized representative" as set forth in Title 30 Texas Administrative Code (TAC) 305.128.

I certify under penalty of law that this document and all attachments were prepared under my direction or supervision in accordance with a system designed to assure that qualified personnel properly gathered and evaluated the information submitted. Based on my inquiry of the person or persons who manage the system, or those persons directly responsible for gathering the information, the information submitted is, to the best of my knowledge and belief, true, accurate, and complete. I am aware that there are significant penalties for submitting false information, including the possibility of fine and imprisonment for knowing violations.

Name: _____

Company: _____

Title: _____

Signature: _____

Date: _____